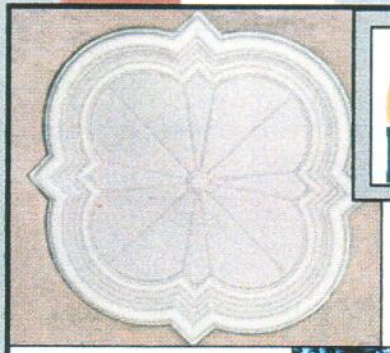

SUN ROCK, INC.

Arches

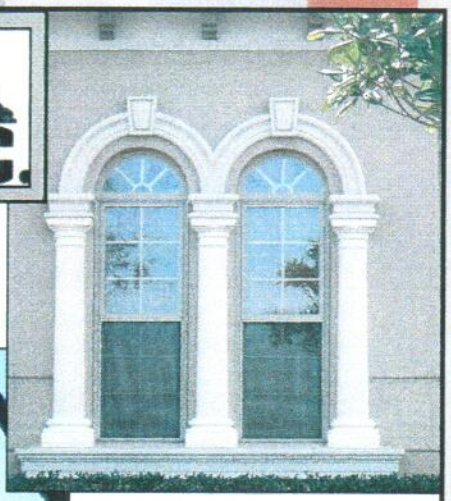

Appliqué

Corbels

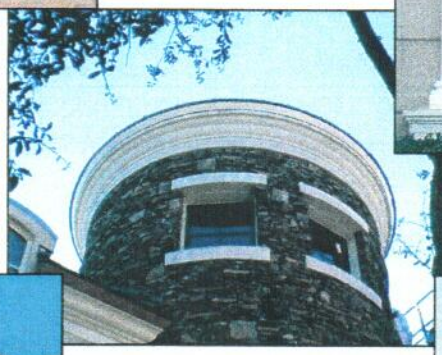

Caps & Bases

Trim Bands

Headers, Sills,

Columns, Plinths, Keystones...

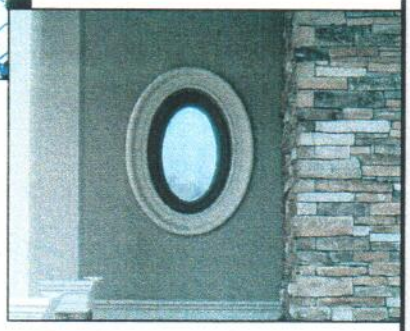

# Sun-Rock Catalog

Sun-Rock's precoated architectural products are designed to add charm and provide permanent enhancements for your special project.

Phone: 727-934-0007 Toll Free: 800-329-1786

SUN ROCK, INC.

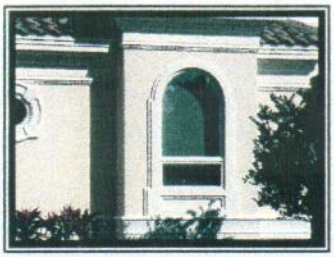

## *REASONS TO SPECIFY SUN-ROCK:*

5 Year Warranty against cracking or peeling.

25 YEARS OF COATING PERFORMANCE: Single, Double or Triple cementations coating is selected by application criteria for hardness and durability. Coating is permanently bonded to the foam at the factory.

PERMANENT ARCHITECTUAL ENHANCEMENT: For all Stucco and EIFS construction. Sharp architectural definition is retained.

FINISHES: Smooth, Stucco-Sand, and Keystone are available choices for customer, architect, or designer. These custom products are hand crafted with close attention to design detail, working from your drawings, blueprints or specifications.

SUN-ROCK LOOKS AND FEELS LIKE ROCK: Other coatings, even those with acrylic modifiers, seldom have adequate surface hardness without mesh to take impact. Only urethane and epoxy coatings rival our standard hardness. Plus, NO woodpecker damage.

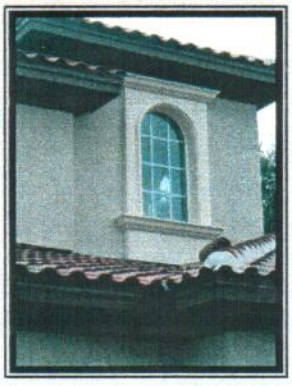

HIGH DENSITY EPS FOAM: Accepts mechanical fasteners, miters like wood, and provides a solid structure that discourages vandalism.

UV PROTECTION: Most competitors depend on paint for UV protection. Unpainted SUN-ROCK does not deteriorate from exposure to weather elements, and may be used as is for that natural stone look. However, where color coordination is specified, SUN-ROCK may be painted using conventional paint practices.

# SUN ROCK, INC.

Since 1978, Sun-Rock has pioneered the coated-foam industry. Today, Sun-Rock products can be found on thousands of up-scaled residential and commercial projects. Sun-Rock manufactures cement coated EPS (high density foam) for architectural embellishments such as window bands, arches, quoins, crown moldings and columns. With unsurpassed quality and craftsmanship this new, innovative product, saves building owners and contractors time and money while adding overall value and beauty to their projects. Chiefly, we provide sharp architectural features at considerably lower installed costs for material and labor when compared with wood, stone, fiberglass, stucco or cast concrete products. SUN-ROCK's precoated architectural products are designed to add charm and provide permanent enhancements for your special project.

## Sections

1. Baluster/Wall Cap
2. Crown Molding
3. Trim Band
4. Header/Sill
5. Window Band
6. Rock Cap
7. Columns, Caps & Bases
8. Corbels, Rafter Tails
9. Shutters
10. Quoins, Appliqué
11. Keystones, Medallions

Sun–Rock, Inc.
Phone: 727-938-0013 Fax: 727-934-5979





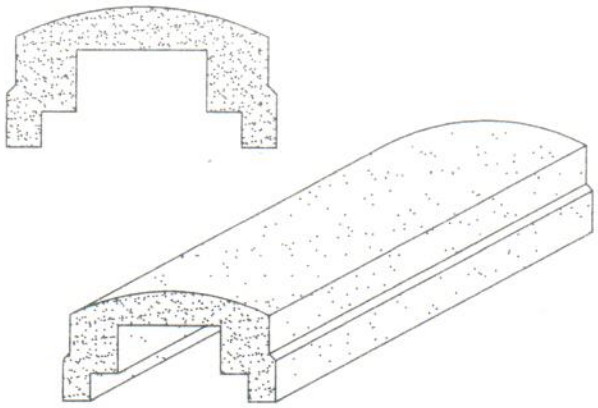

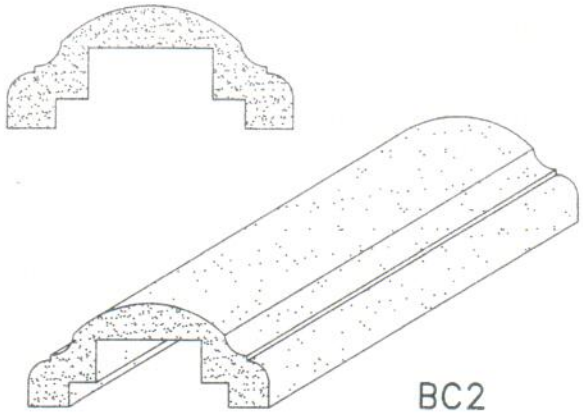

BC2

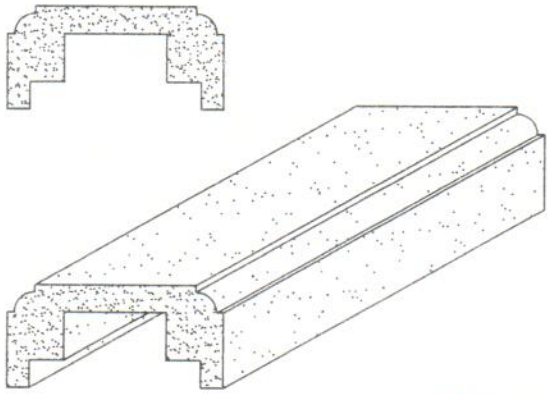

BC1–C3

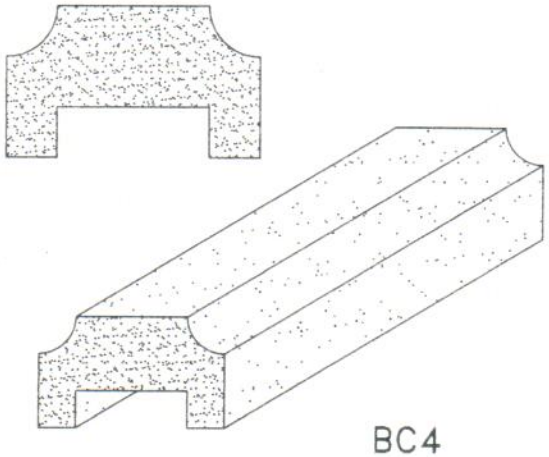

BC4

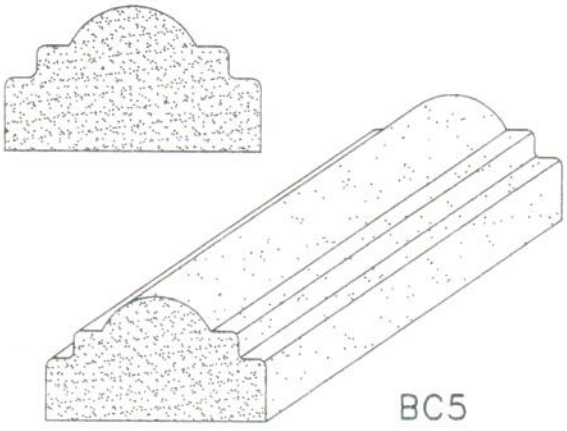

BC5

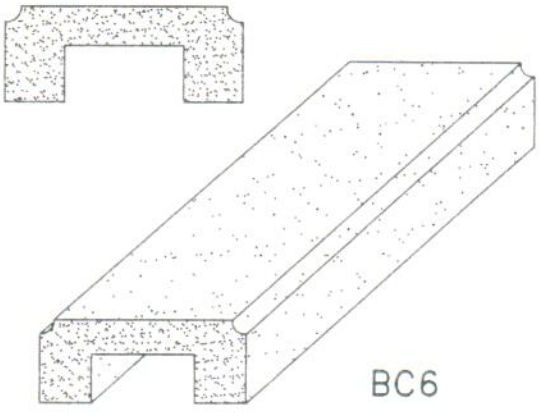

BC6

Sun-Rock, Inc.
Phone: 727-938-0013 Fax: 727-934-5979





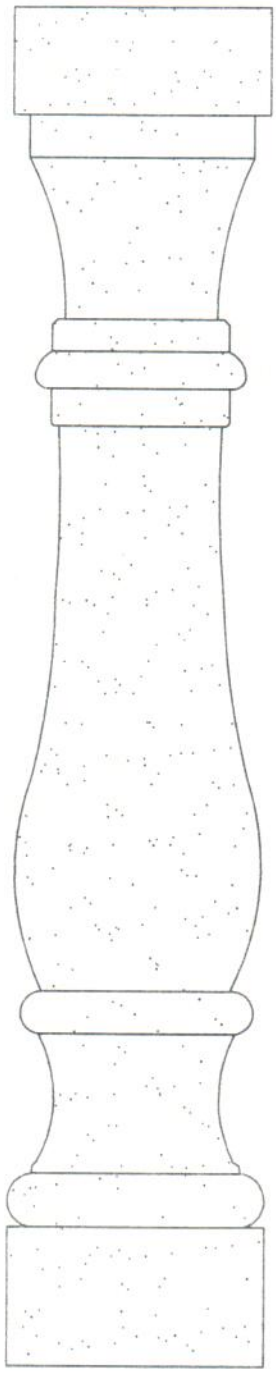

BL1

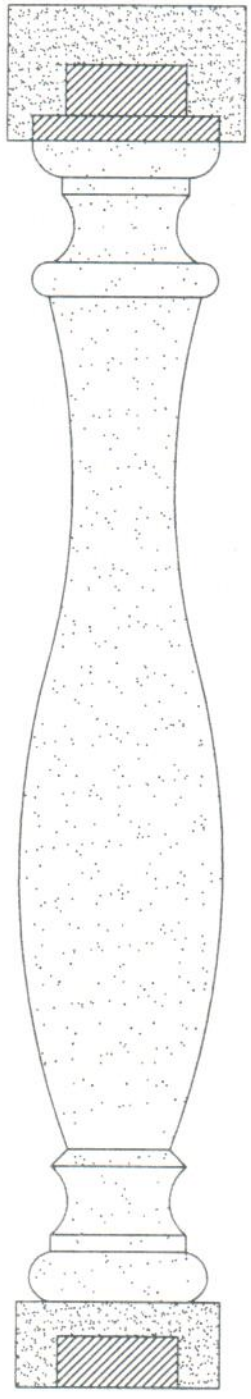

BL2

Sun–Rock, Inc.
Phone: 727-938-0013 Fax: 727-934-5979





PC1

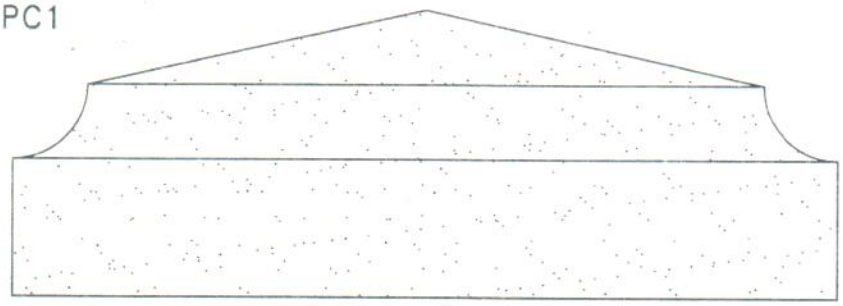

PC2

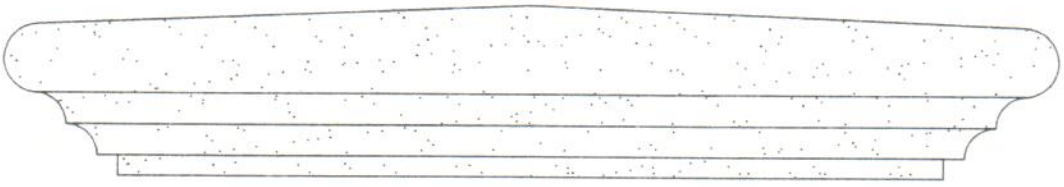

PC3

Sun–Rock, Inc.
Phone: 727-938-0013 Fax: 727-934-5979





PC4

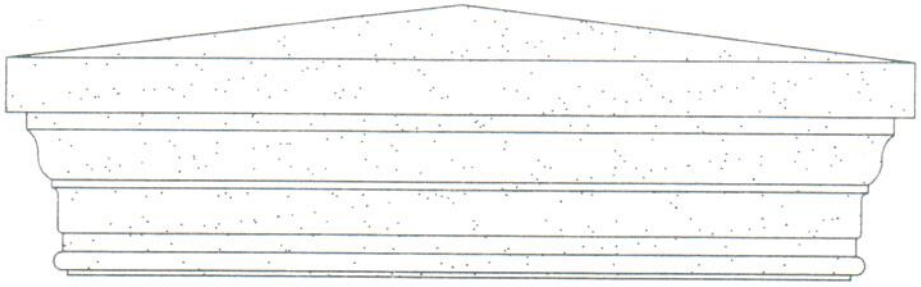

PC5

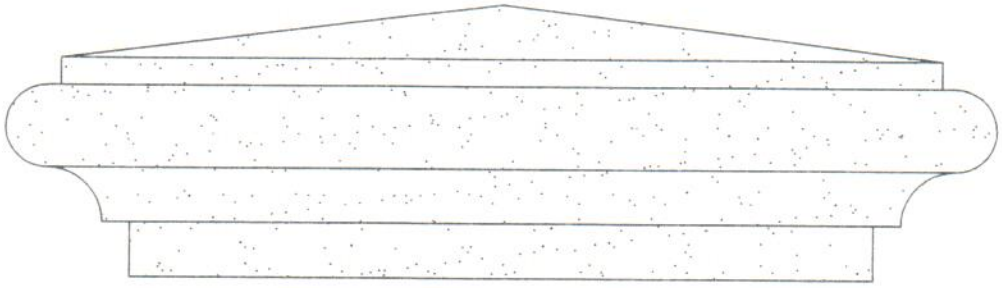

PC6

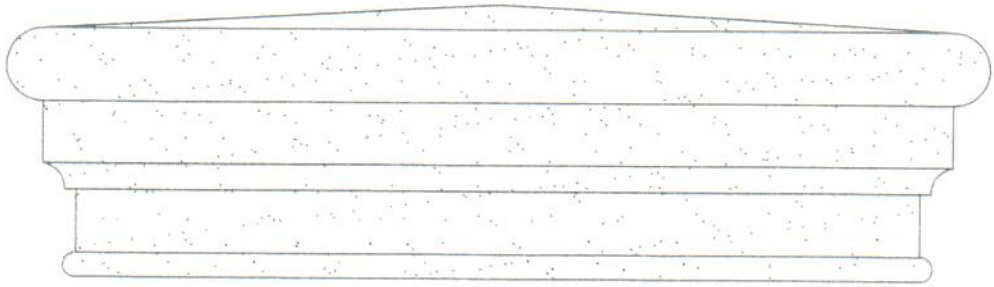

Sun–Rock, Inc.
Phone: 727-938-0013 Fax: 727-934-5979





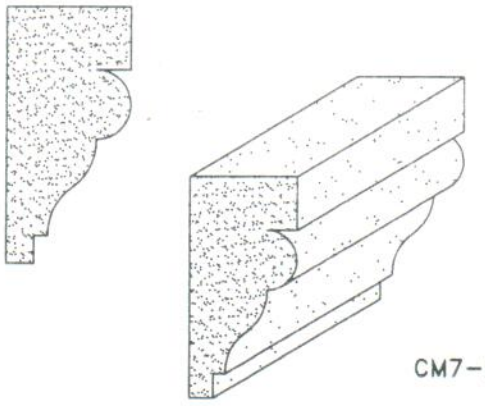

CM7–N

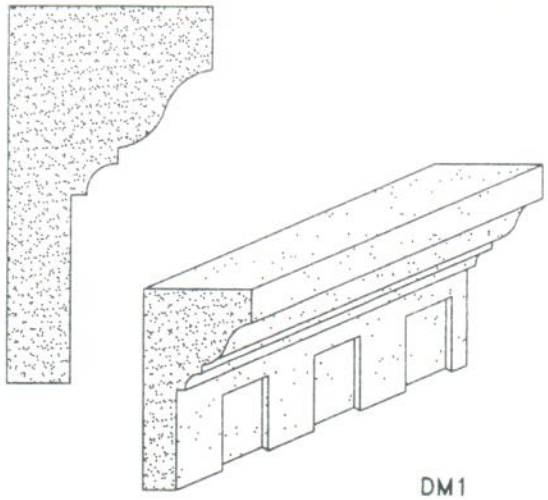

DM1

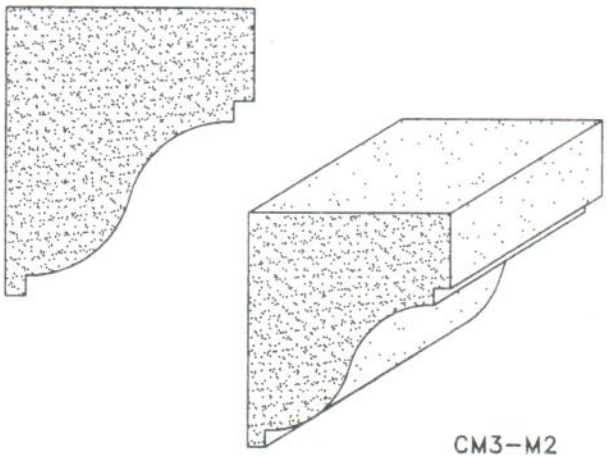

CM3–M2

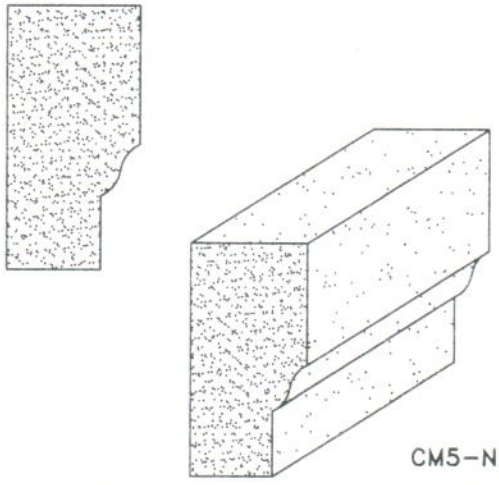

CM5–N

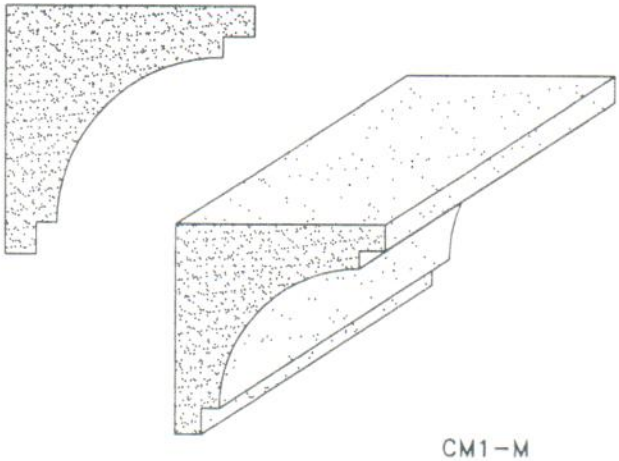

CM1–M

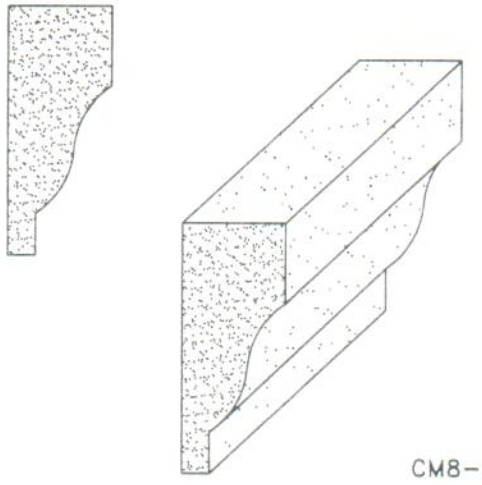

CM8–N

Sun–Rock, Inc.
Phone: 727-938-0013 Fax: 727-934-5979





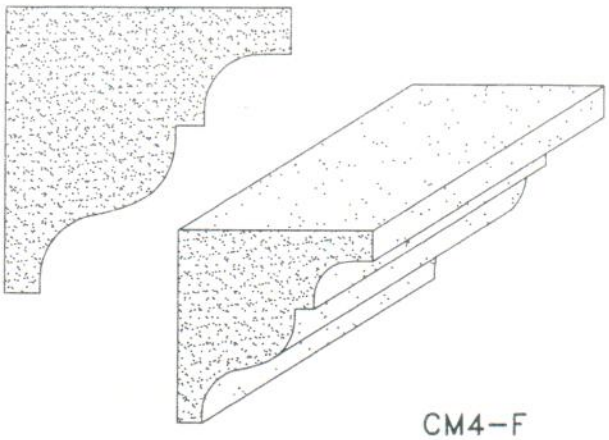

CM4–F

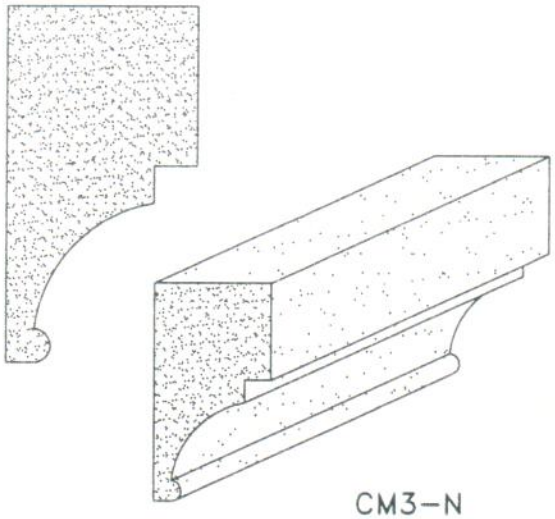

CM3–N

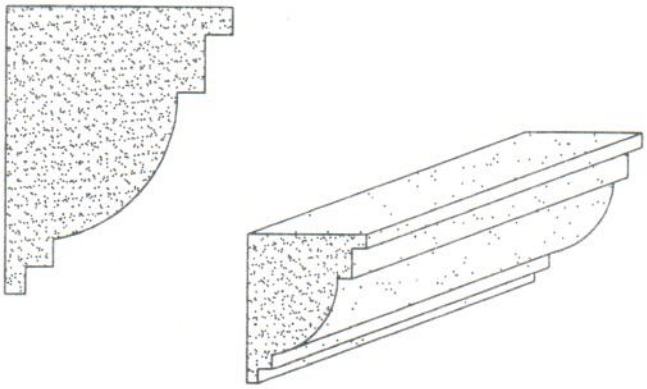

CM1–N

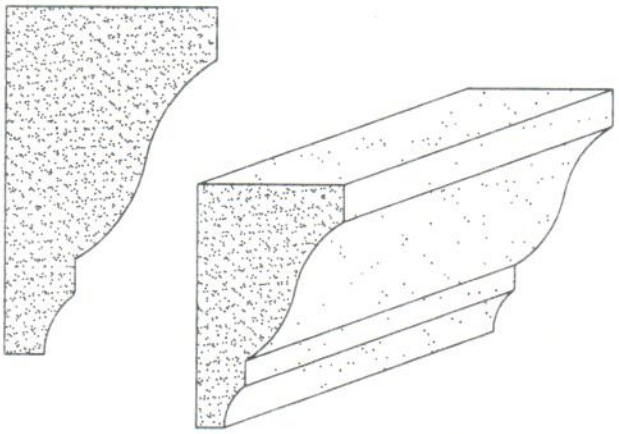

CM4–N

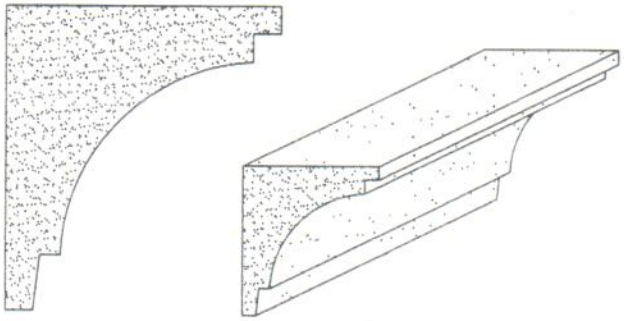

CM2–N

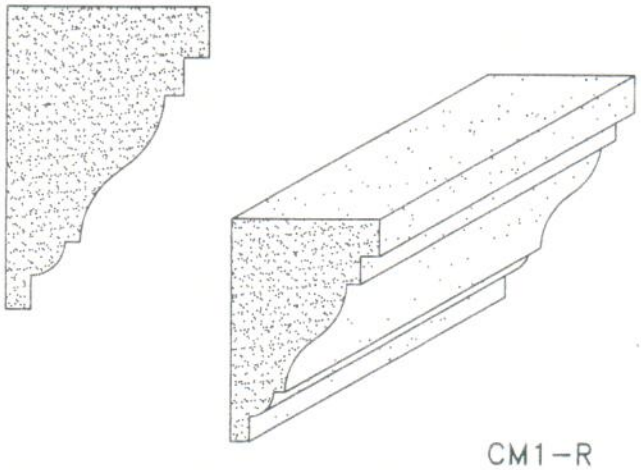

CM1–R

Sun–Rock, Inc.
Phone: 727-938-0013 Fax: 727-934-5979



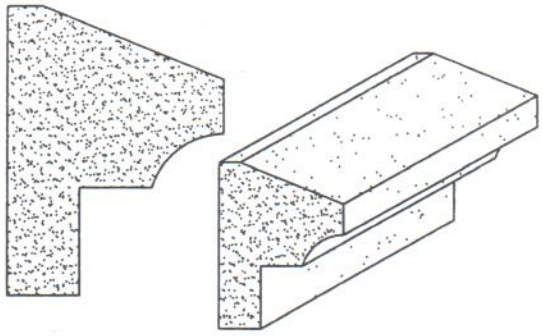

TB1–N

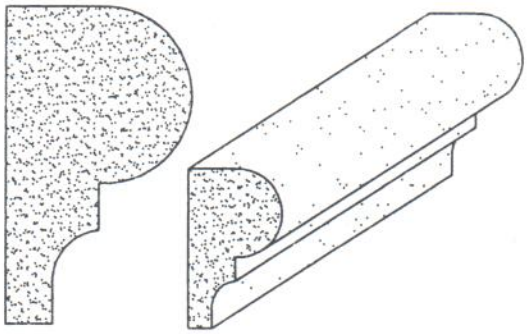

TB2–N

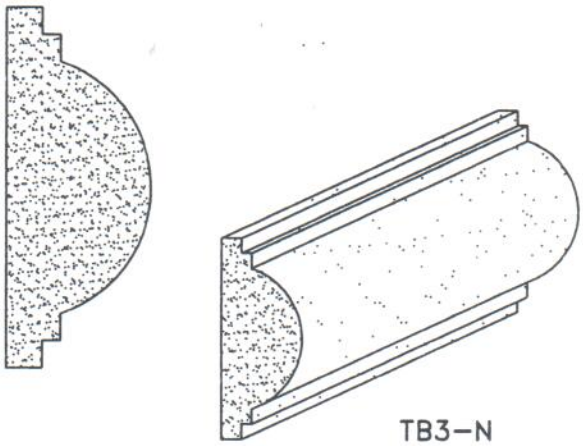

TB3–N

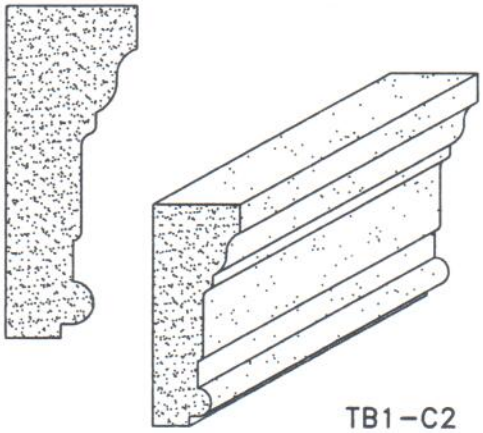

TB1–C2

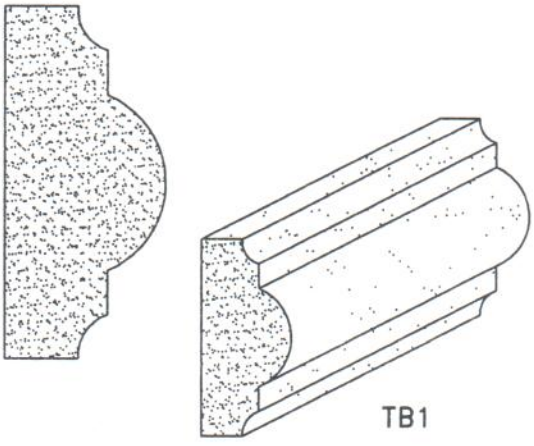

TB1

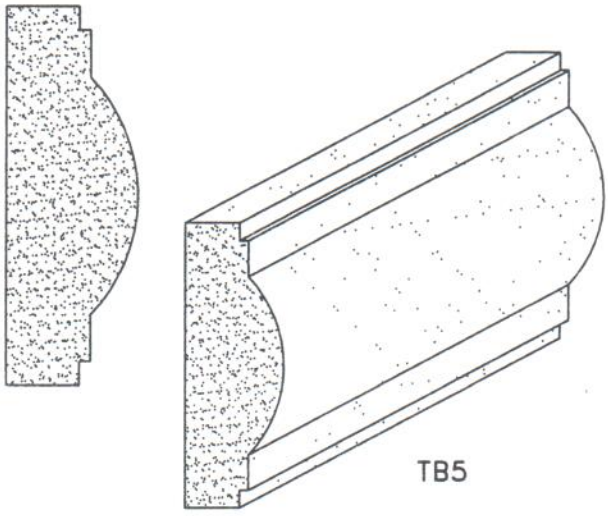

TB5

Sun-Rock, Inc.
Phone: 727-938-0013 Fax: 727-934-5979



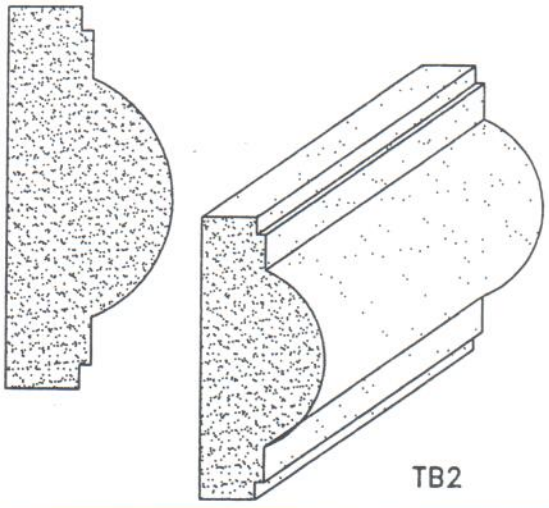

TB2

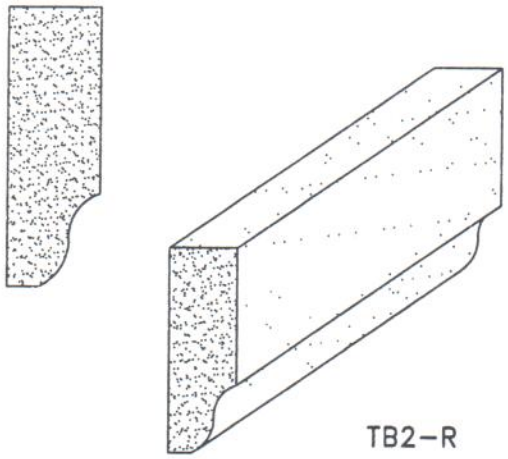

TB2-R

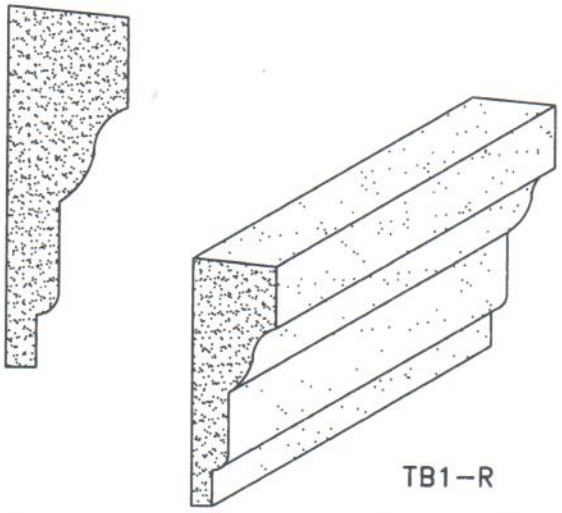

TB1-R

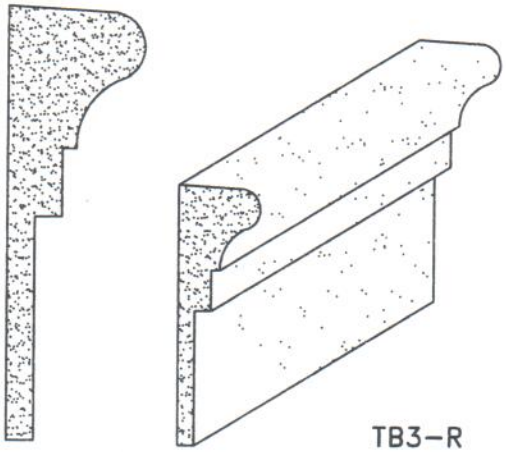

TB3-R

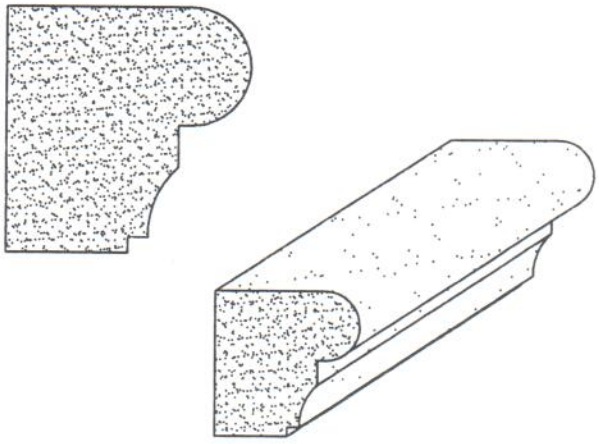

TB4

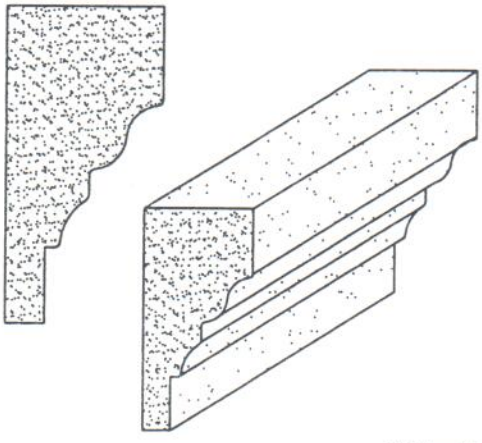

TB4-N

Sun–Rock, Inc.
Phone: 727-938-0013 Fax: 727-934-5979





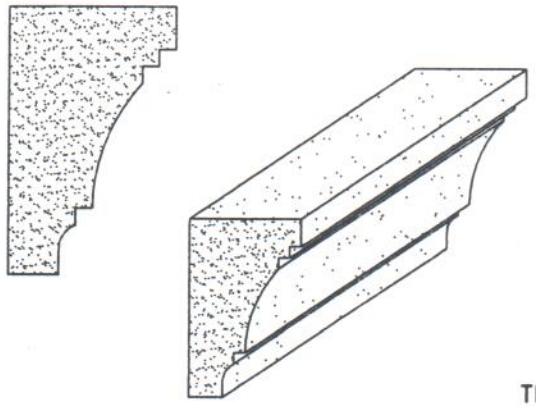

TB5–P

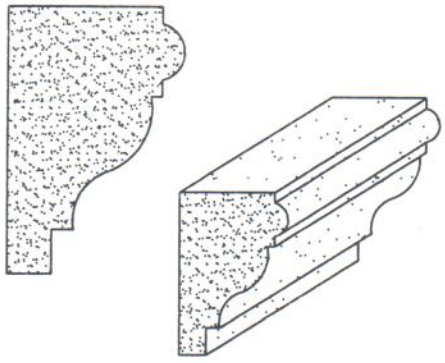

TB1–C3

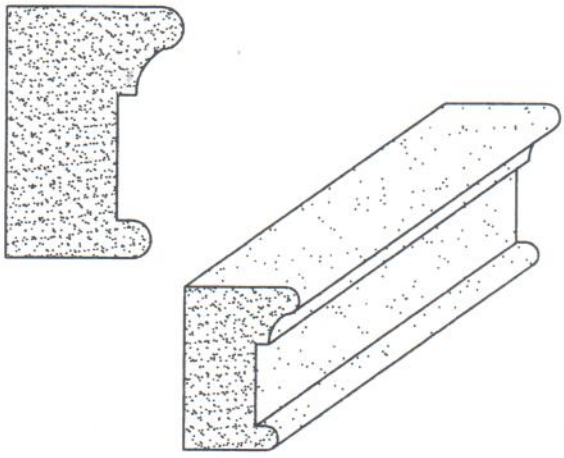

TB7

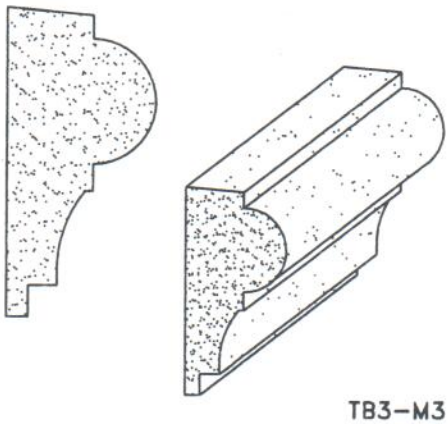

TB3–M3

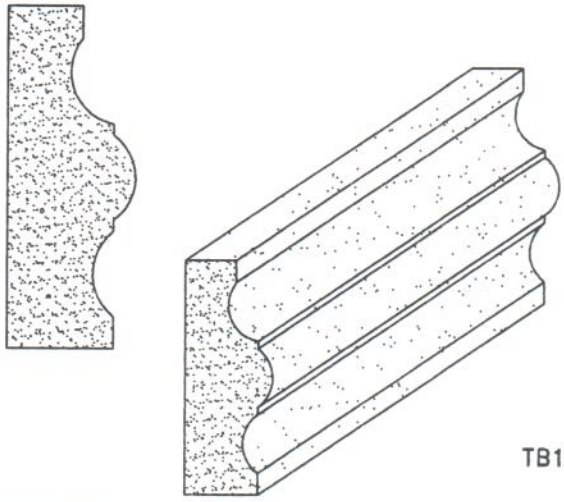

TB10

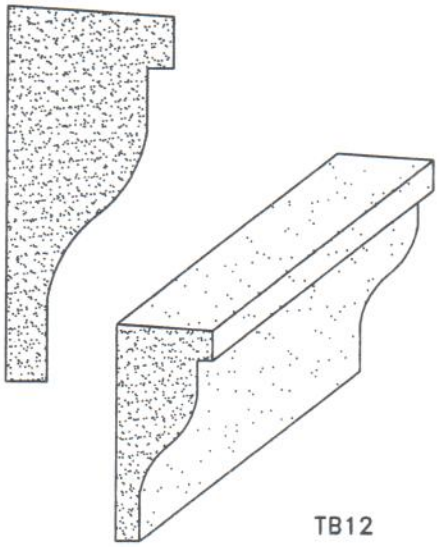

TB12

Sun–Rock, Inc.
Phone: 727–938–0013 Fax: 727–934–5979



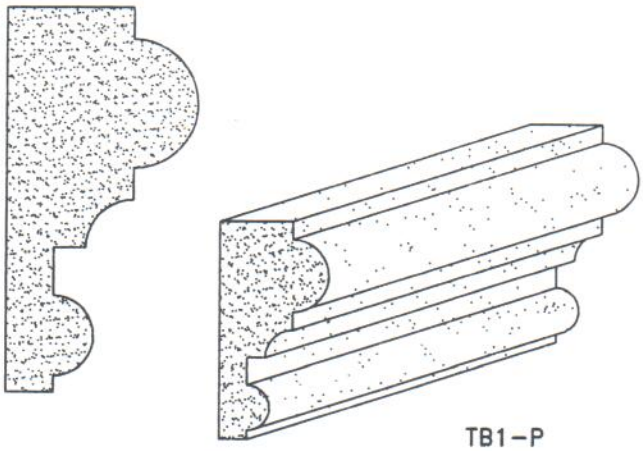

TB1–P

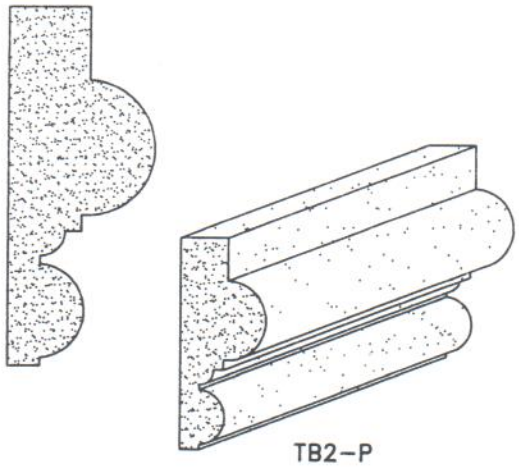

TB2–P

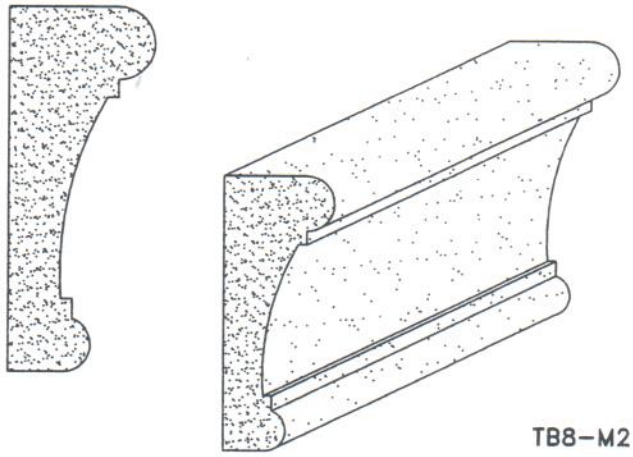

TB8–M2

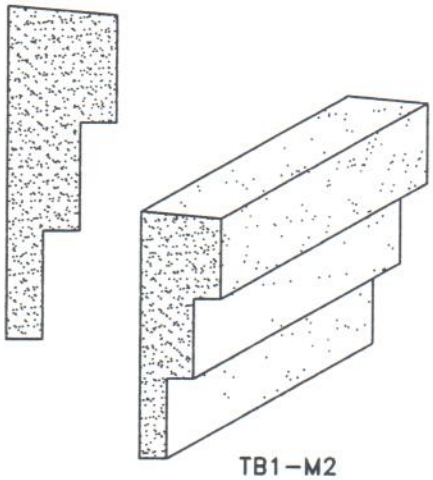

TB1–M2

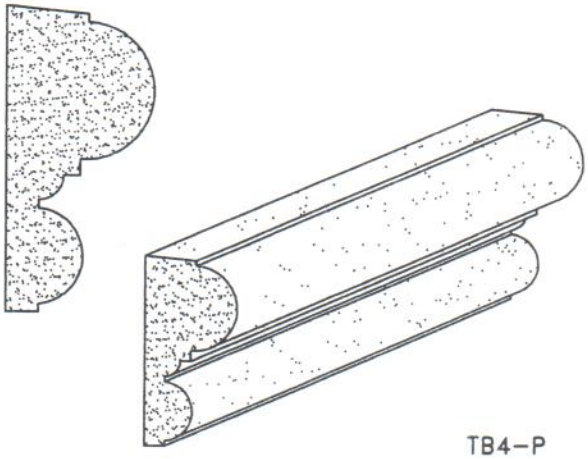

TB4–P

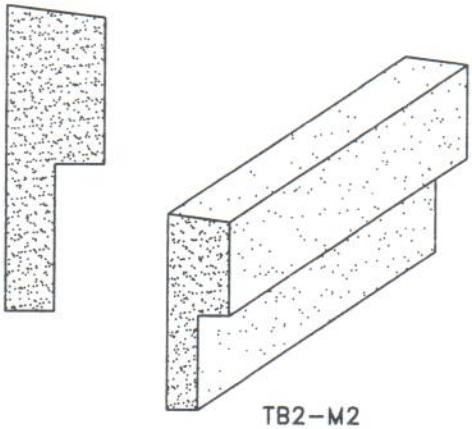

TB2–M2

Sun-Rock, Inc.
Phone: 727-938-0013 Fax: 727-934-5979



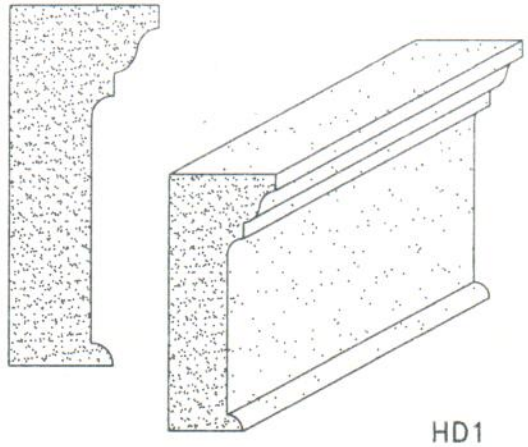

HD1

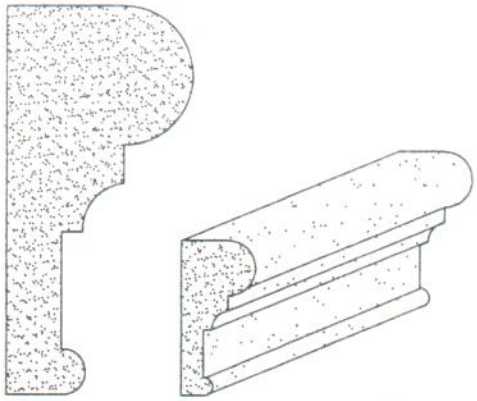

WS1-P

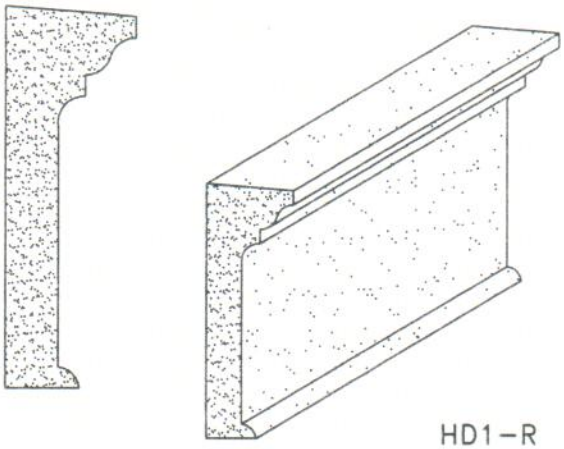

HD1-R

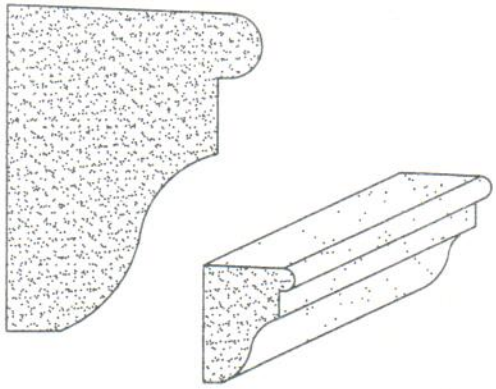

WS3-N

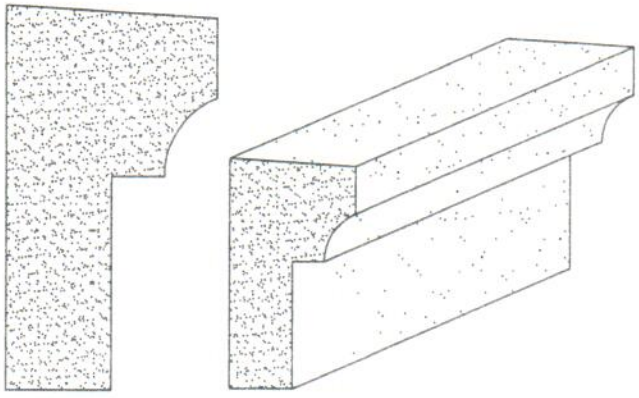

WS2-N

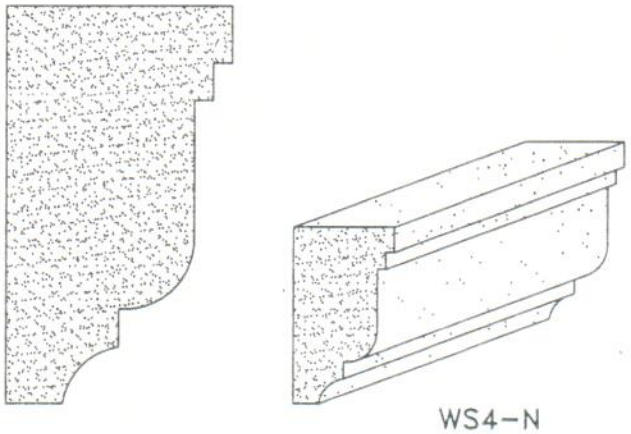

WS4-N

Sun-Rock, Inc.
Phone: 727-938-0013 Fax: 727-934-5979



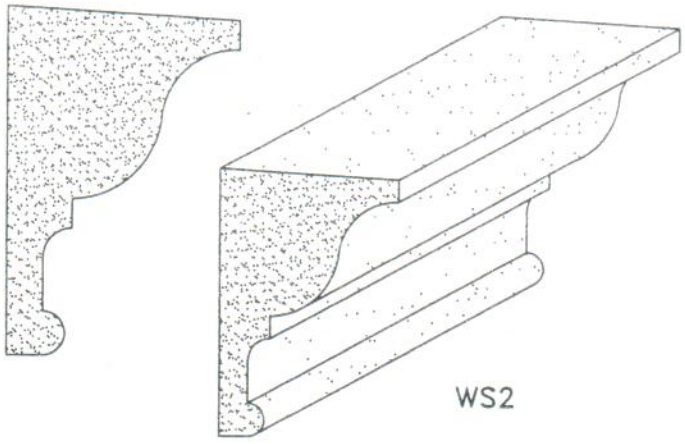

WS2

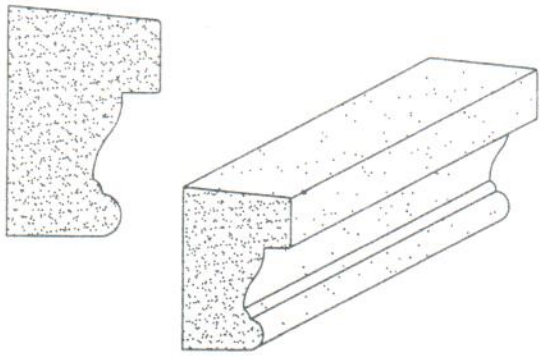

WS3

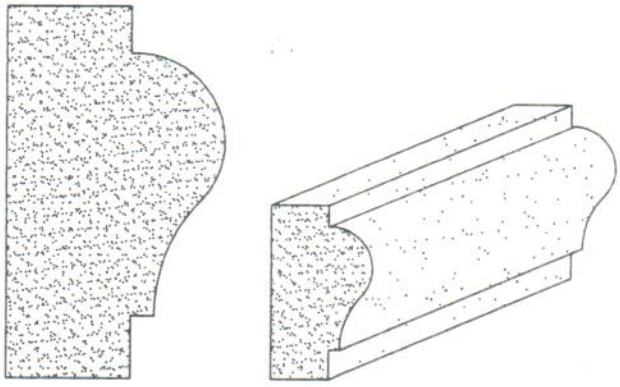

WS6-N

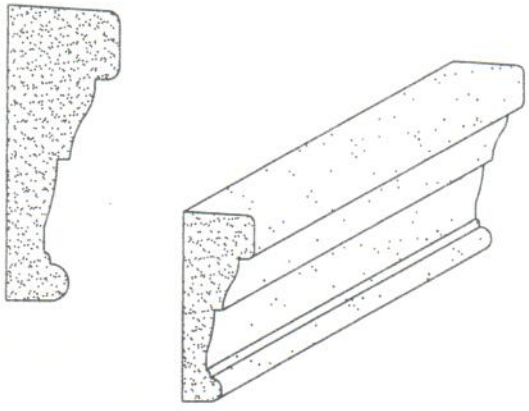

WS4

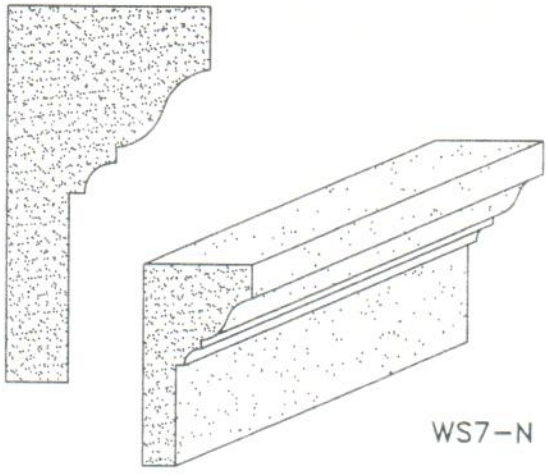

WS7-N

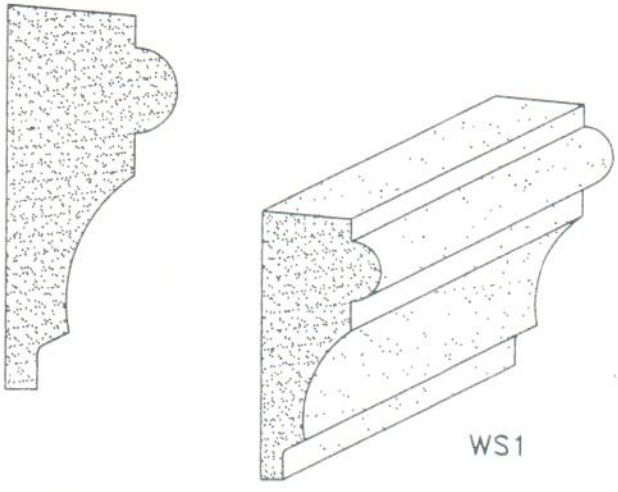

WS1

Sun–Rock, Inc.
Phone: 727-938-0013 Fax: 727-934-5979



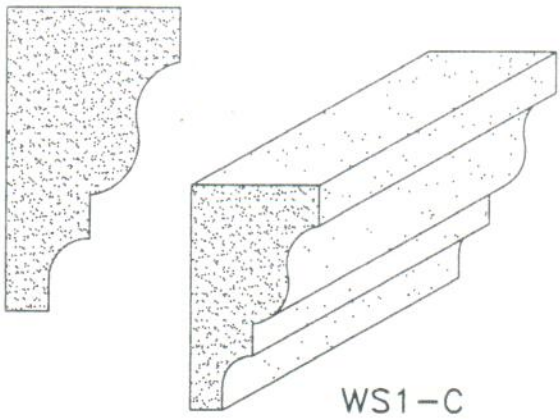

WS1–C

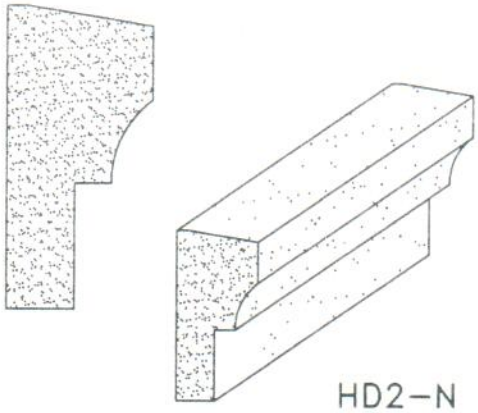

HD2–N

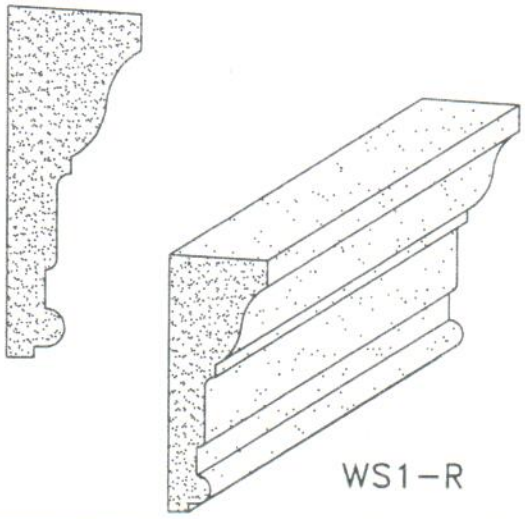

WS1–R

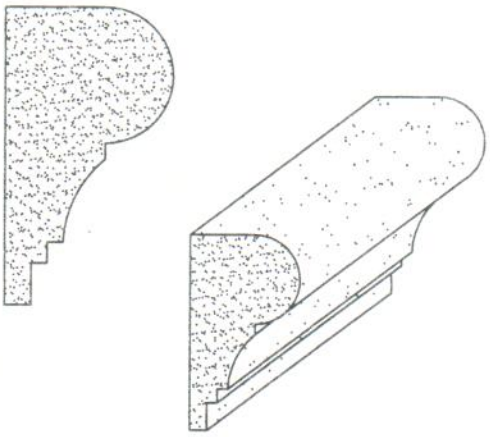

WS2–P

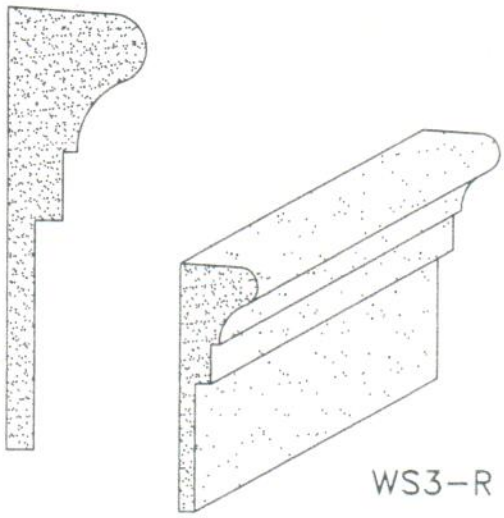

WS3–R

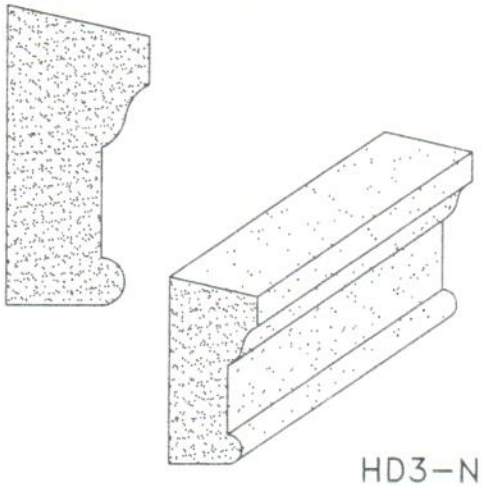

HD3–N

Sun-Rock, Inc.
Phone: 727-938-0013 Fax: 727-934-5979



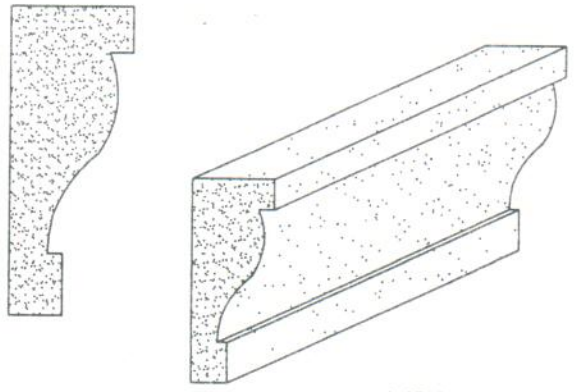

WB2

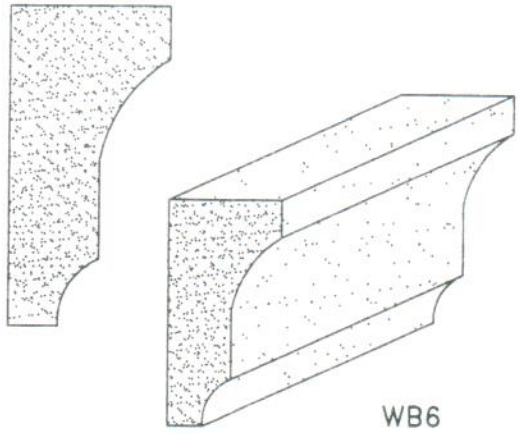

WB6

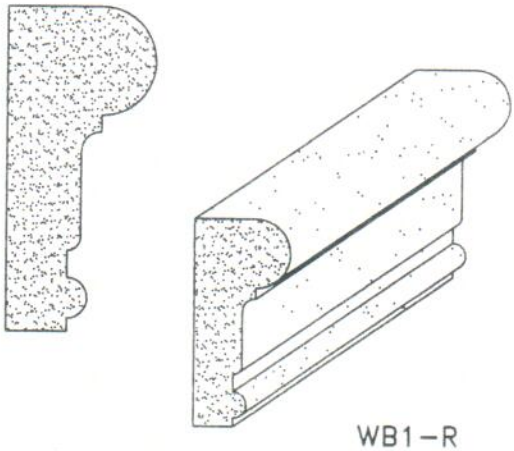

WB1-R

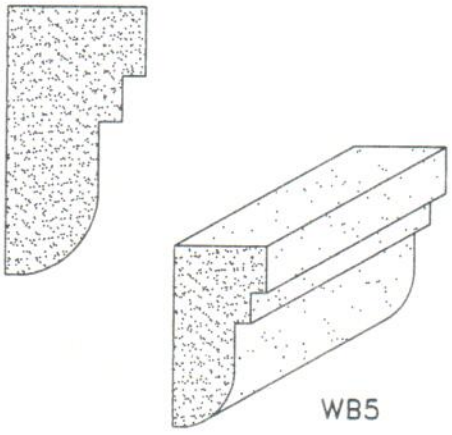

WB5

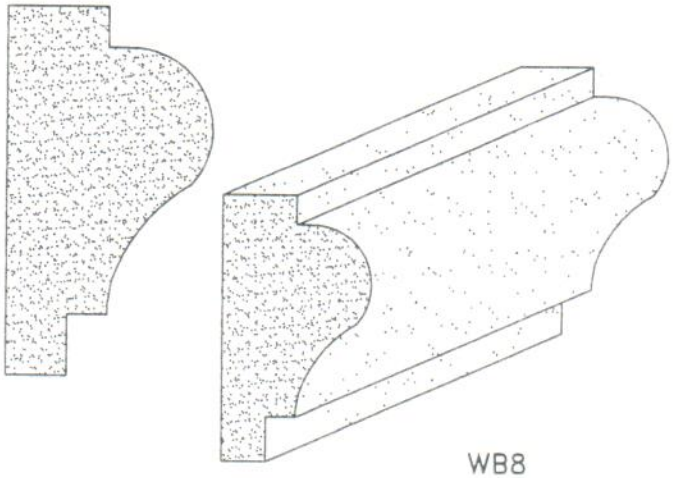

WB8

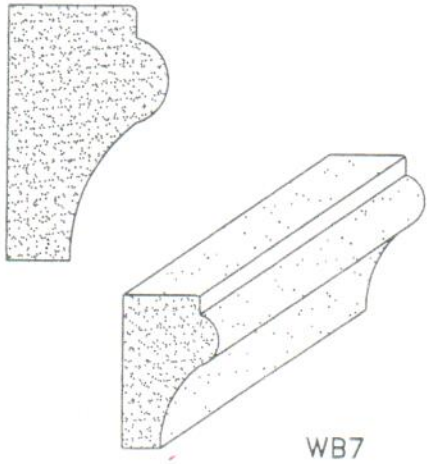

WB7

Sun-Rock, Inc.
Phone: 727-938-0013 Fax: 727-934-5979



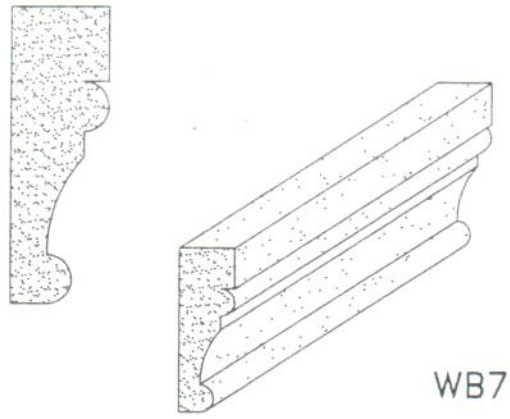

WB7-N

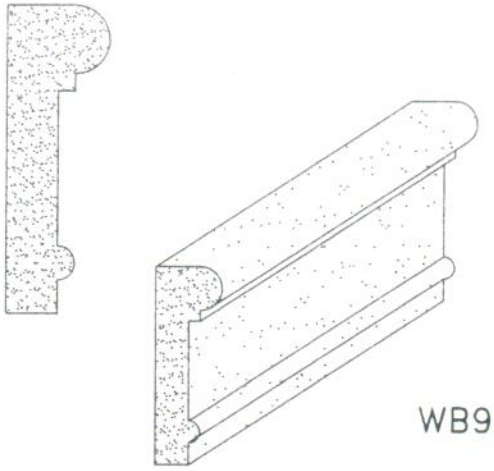

WB9

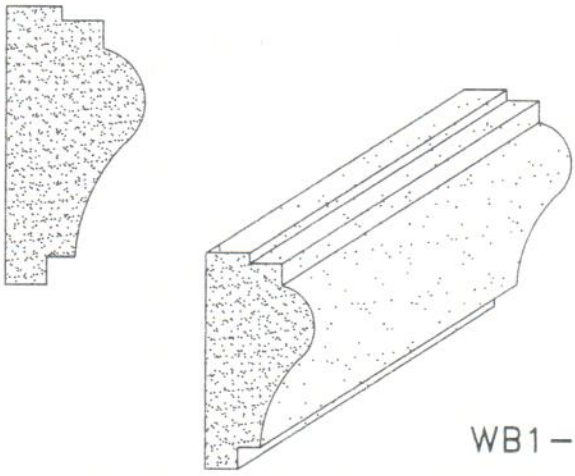

WB1-N

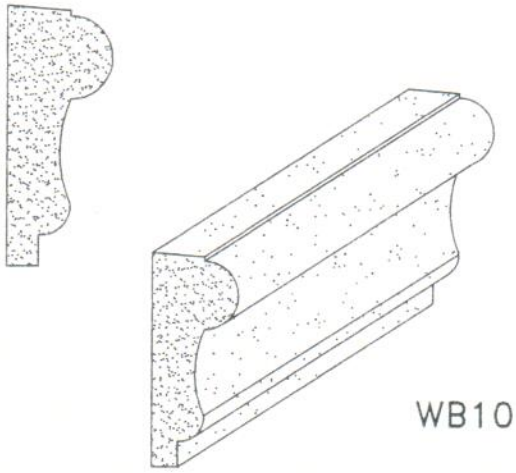

WB10

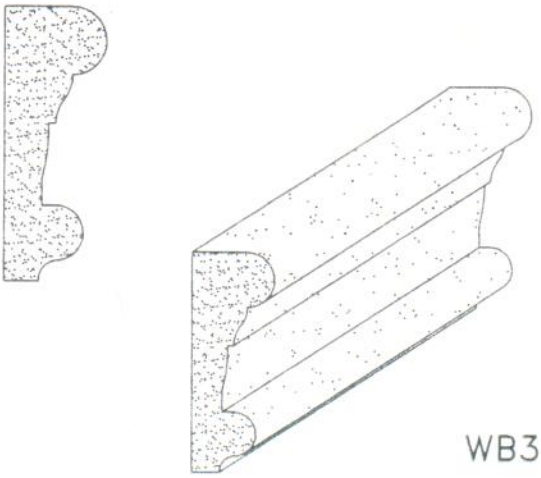

WB3

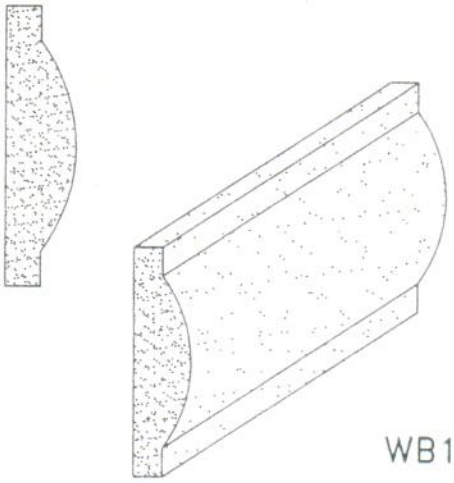

WB11

Sun-Rock, Inc.
Phone: 727-938-0013 Fax: 727-934-5979



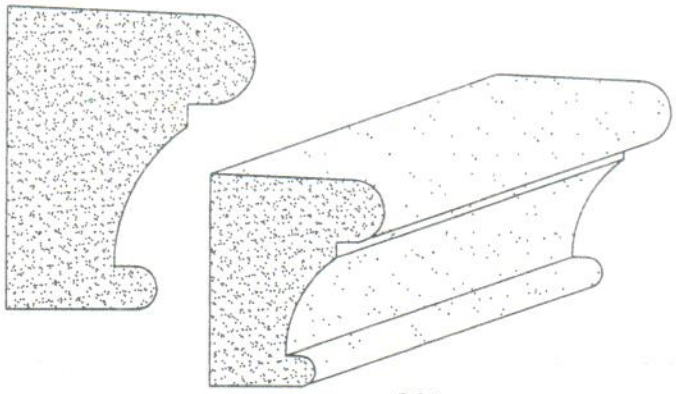

RC1

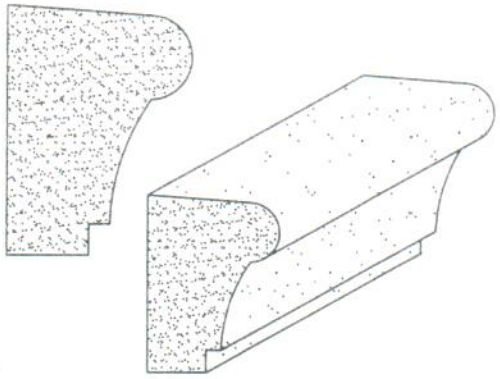

RC4-M2

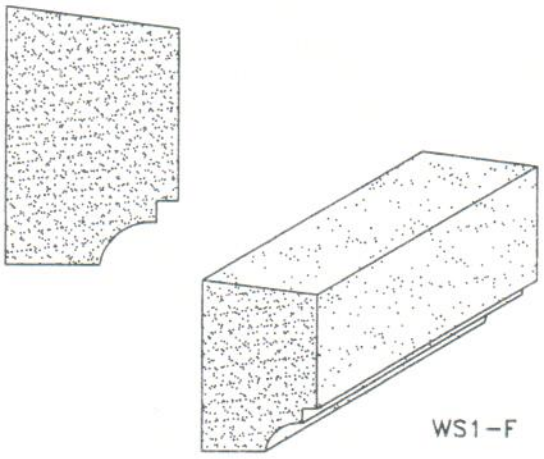

WS1-F

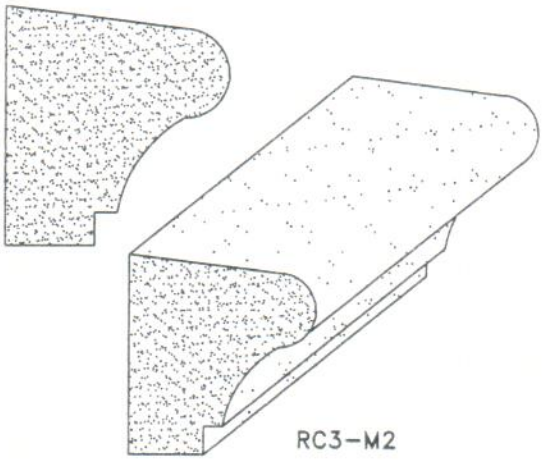

RC3-M2

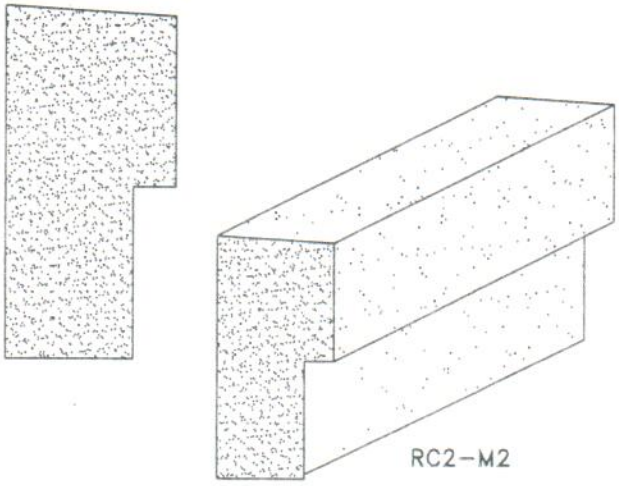

RC2-M2

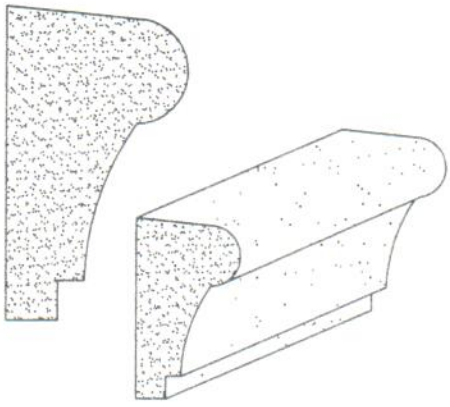

RC1-M2

Sun-Rock, Inc.
Phone: 727-938-0013 Fax: 727-934-5979





2/3 Taper

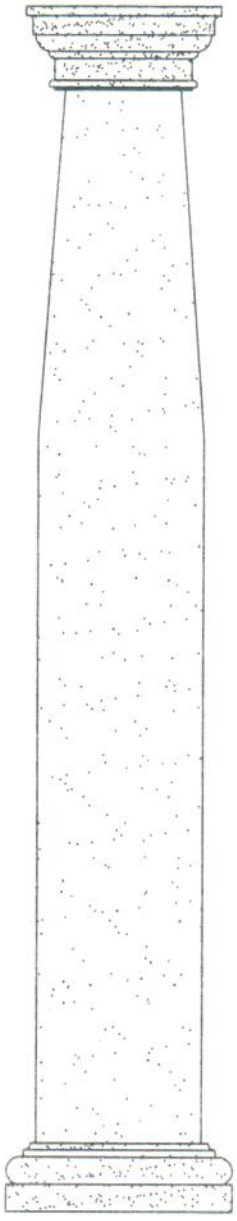

CL1

Straight

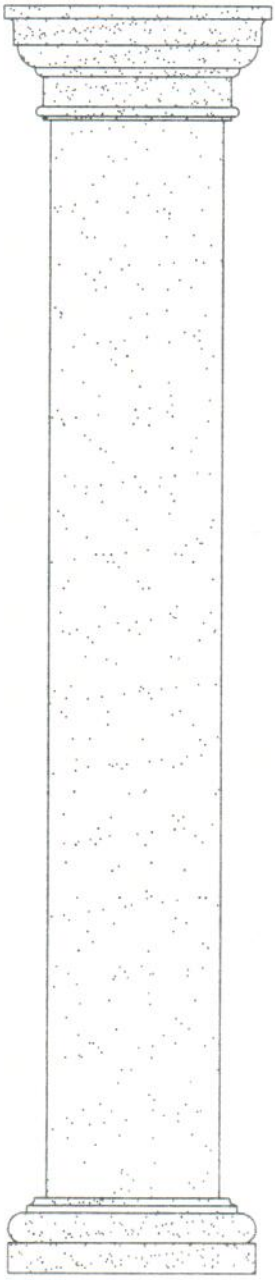

CL2

Emphesis

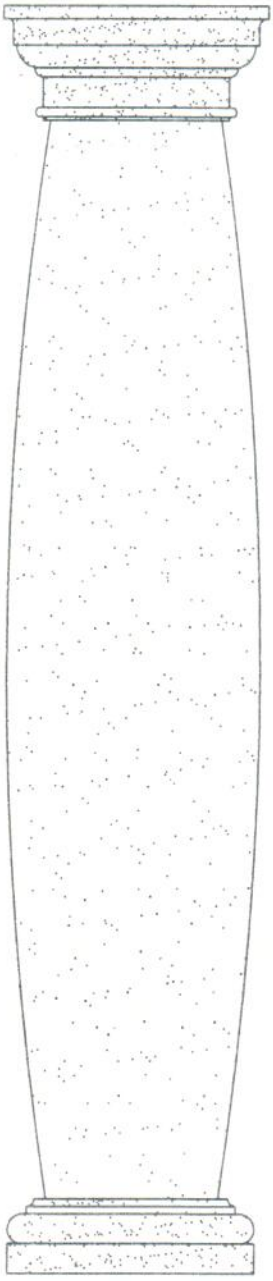

CL3

Tapered

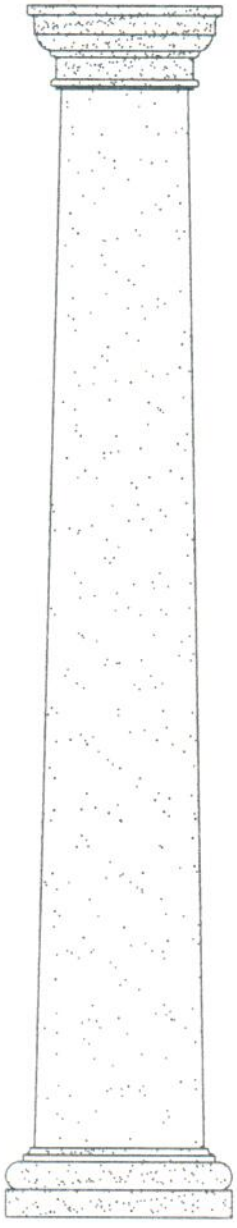

CL4

Sun-Rock, Inc.
Phone: 727-938-0013 Fax: 727-934-5979





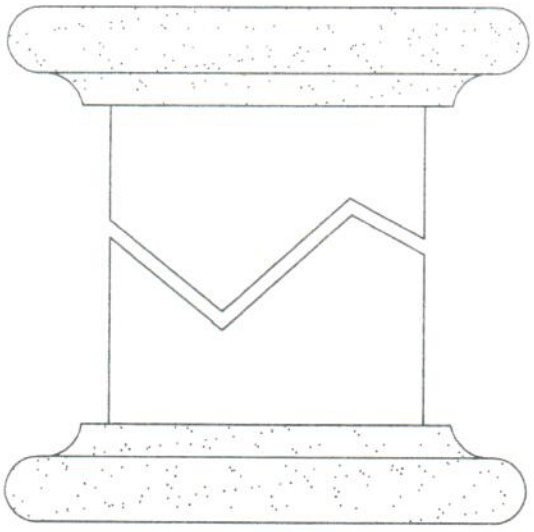

CR1-C

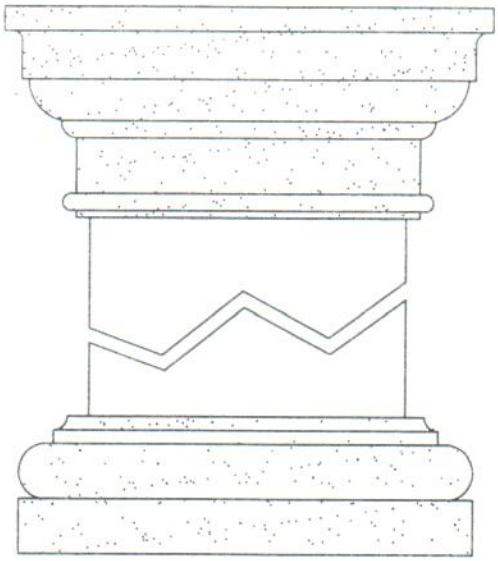

CR1

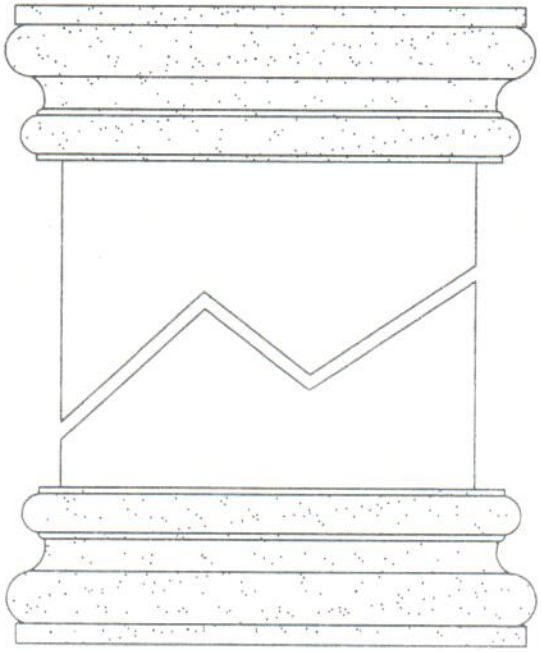

CR2-Na

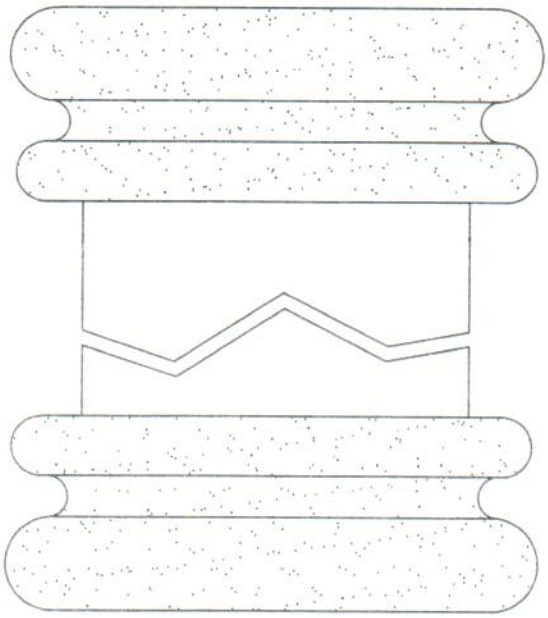

CR2-N

Sun-Rock, Inc.
Phone: 727-938-0013 Fax: 727-934-5979





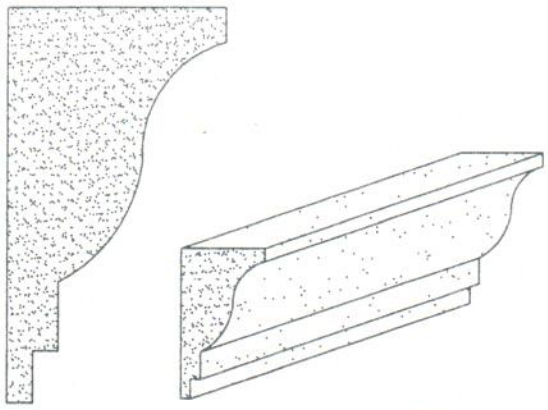

CB1

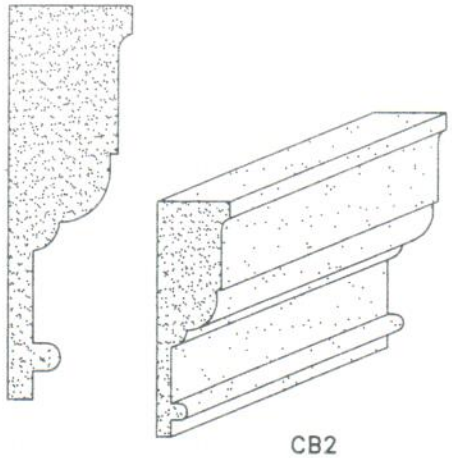

CB2

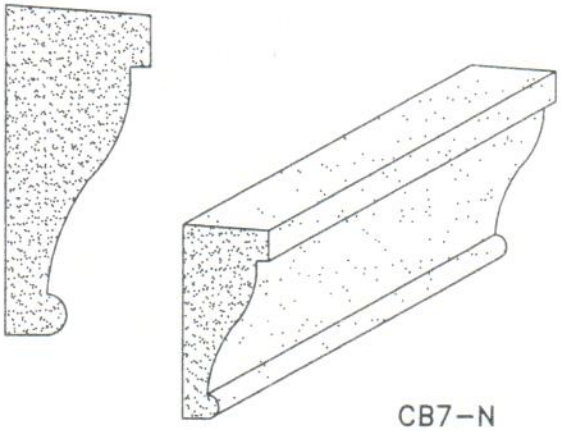

CB7-N

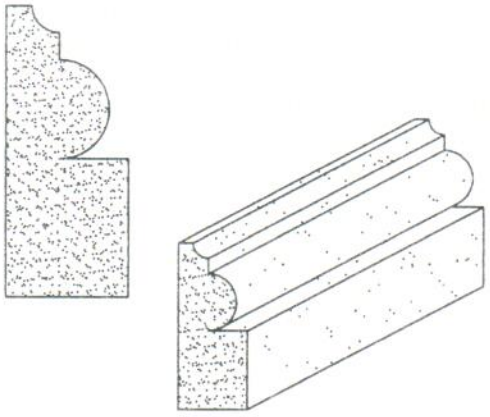

CB3

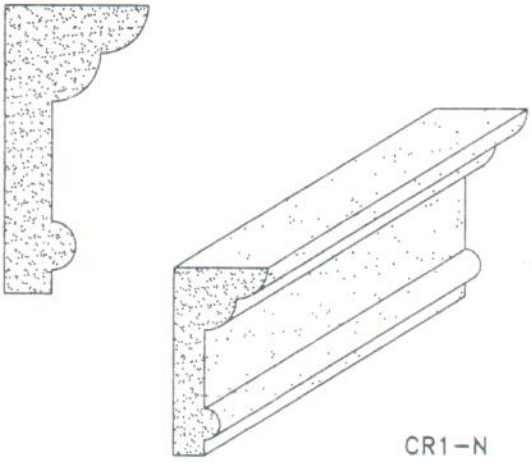

CR1-N

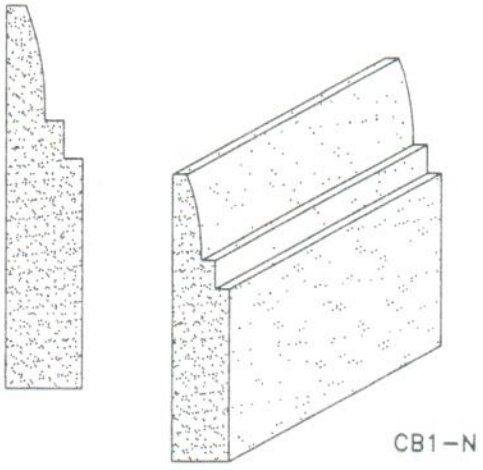

CB1-N

Sun–Rock, Inc.
Phone: 727-938-0013 Fax: 727-934-5979



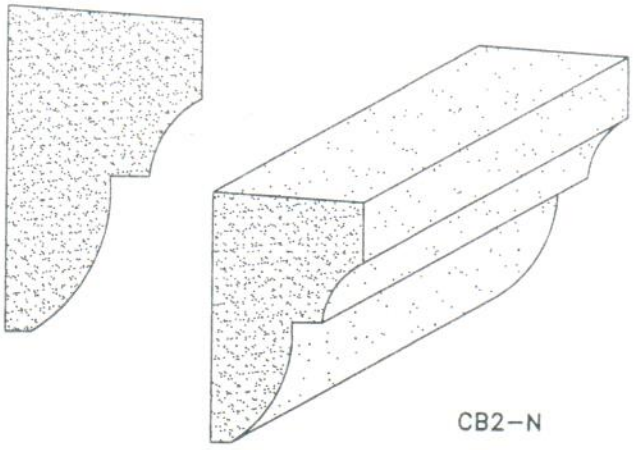

CB2–N

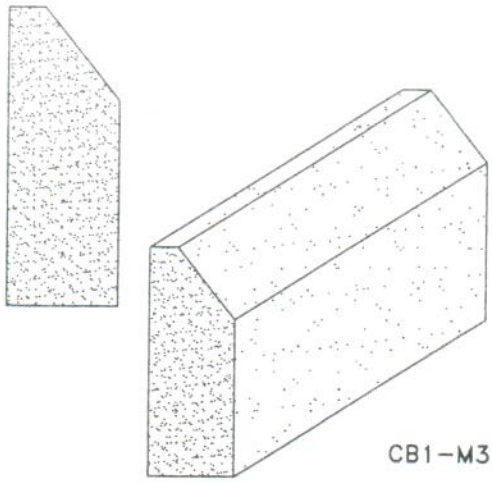

CB1–M3

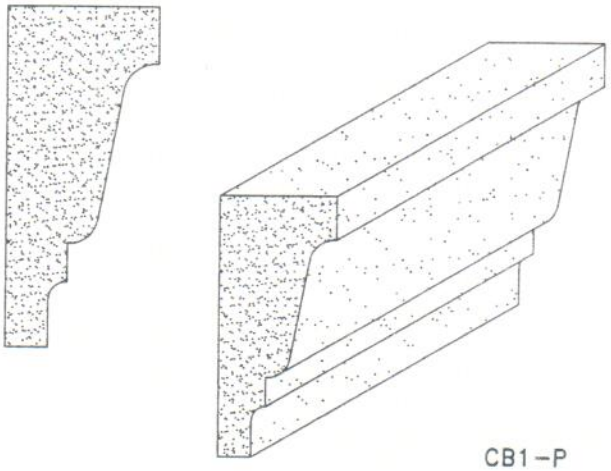

CB1–P

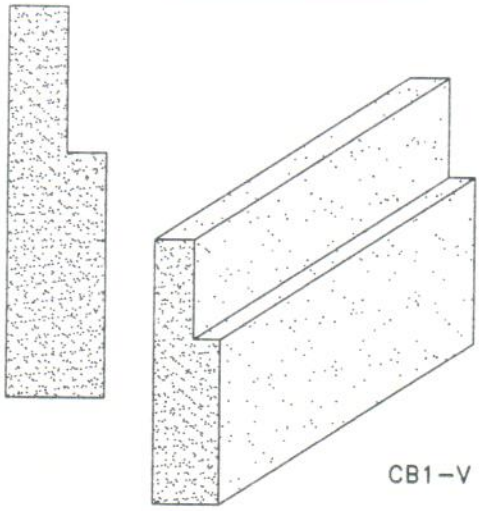

CB1–V

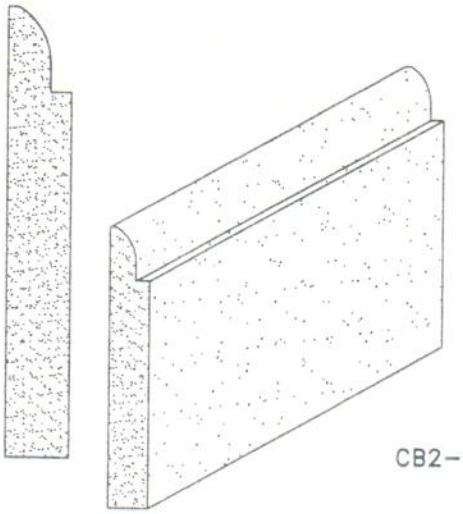

CB2–S

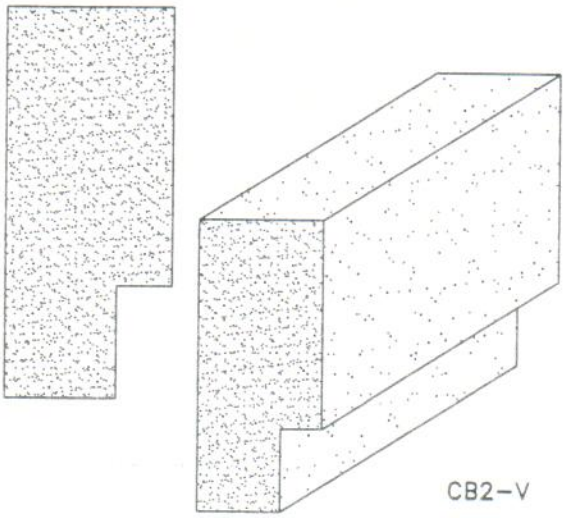

CB2–V

Sun–Rock, Inc.
Phone: 727-938-0013 Fax: 727-934-5979





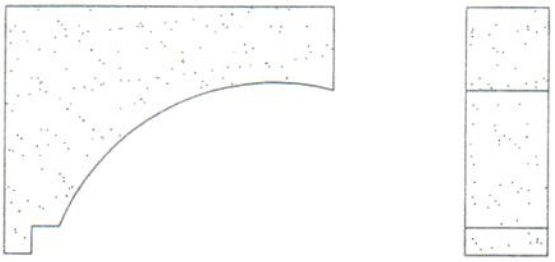

CO1–M2

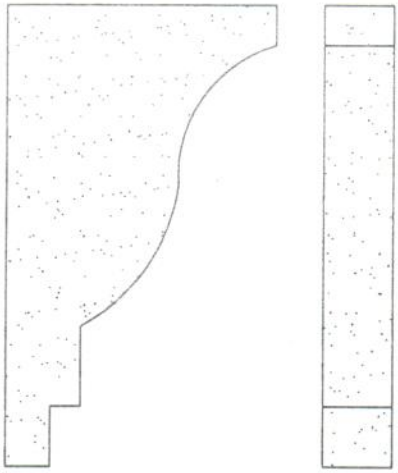

CO3–M2

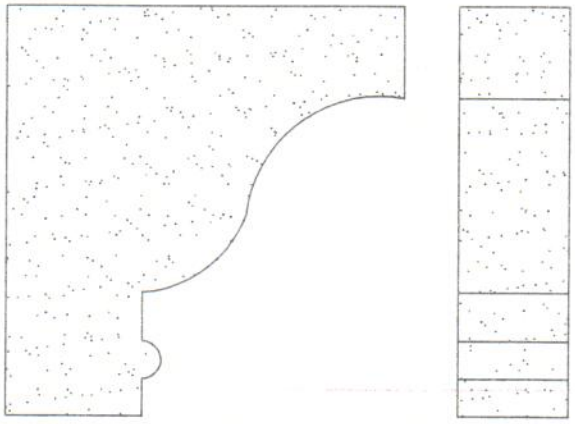

CO5–M2

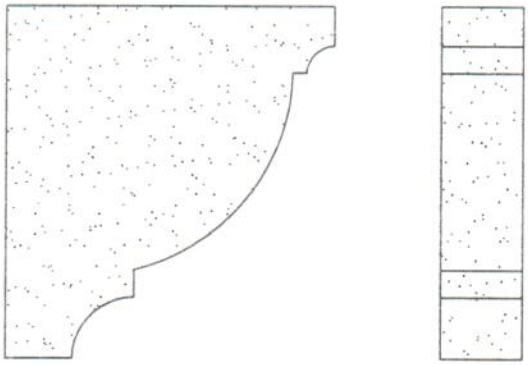

CO1

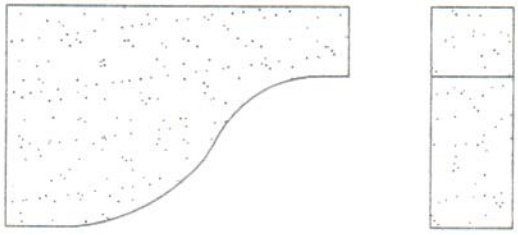

CO4–M2

CO2

Sun-Rock, Inc.
Phone: 727-938-0013 Fax: 727-934-5979



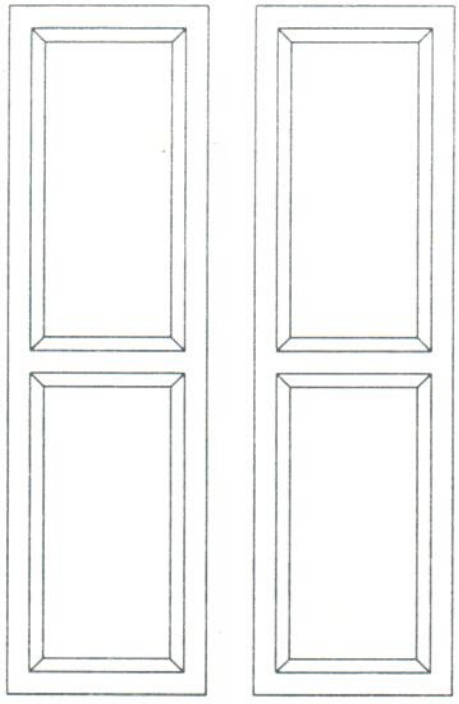

SH1

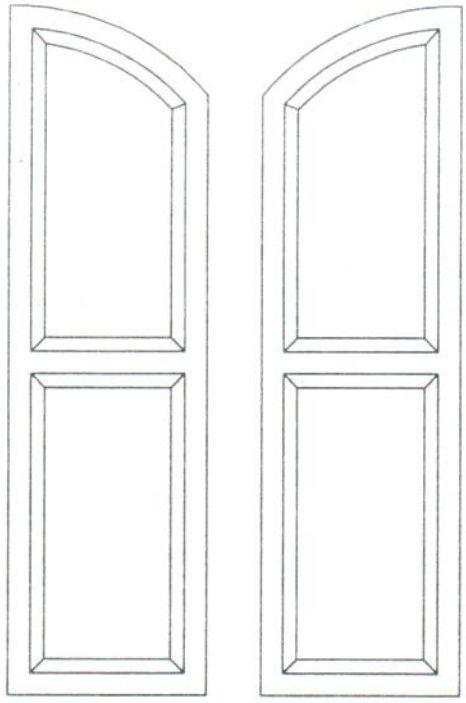

SH2

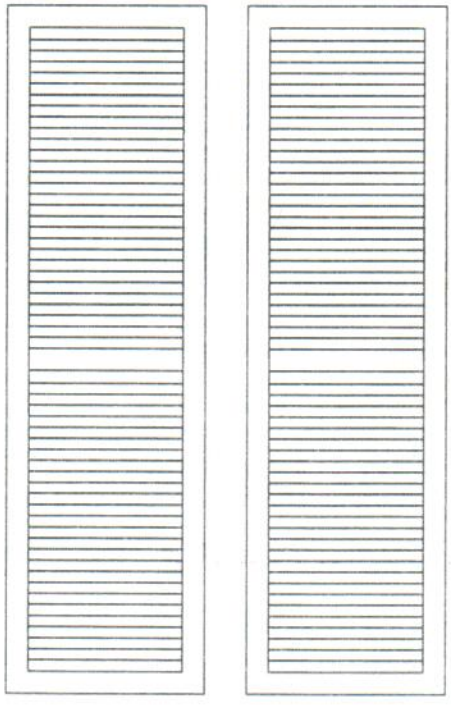

SH3

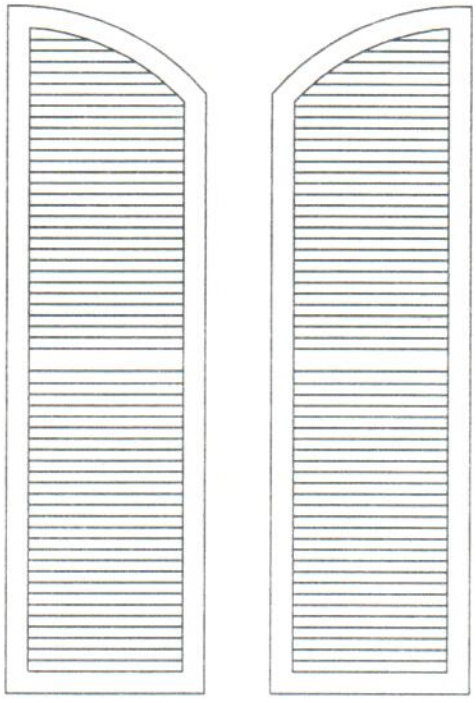

SH4

Sun-Rock, Inc.
Phone: 727-938-0013 Fax: 727-934-5979



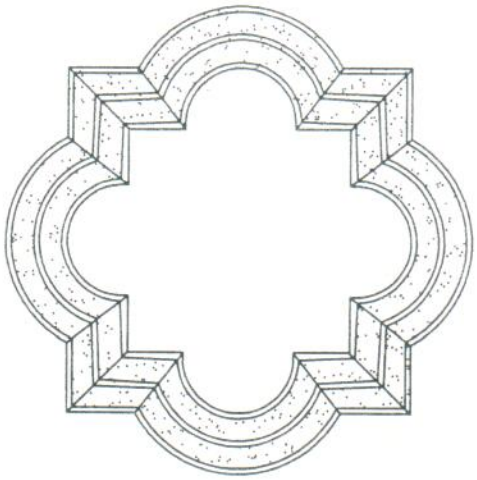

AP1

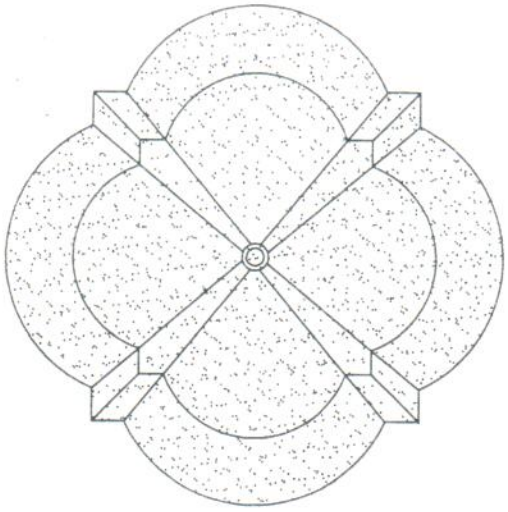

AP2

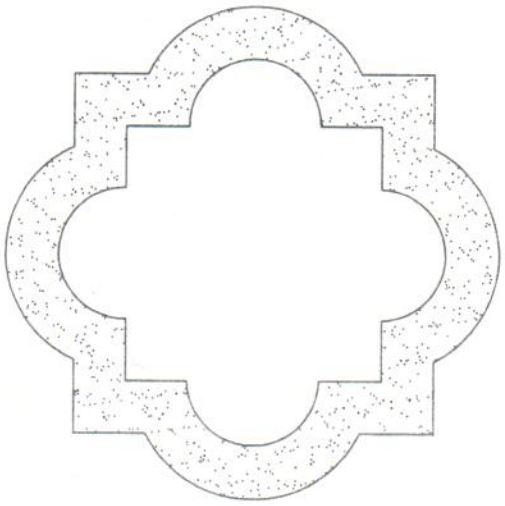

AP3

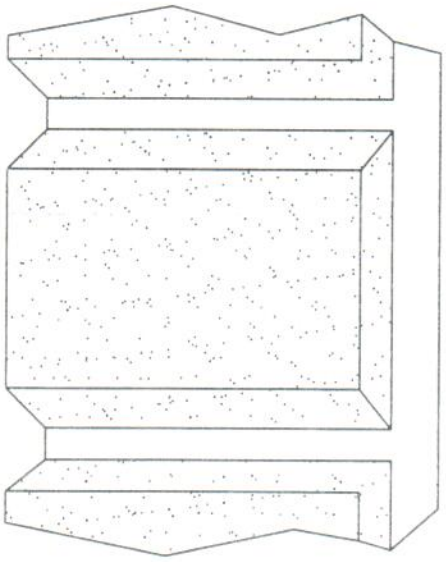

QN1

Sun-Rock, Inc.
Phone: 727-938-0013 Fax: 727-934-5979



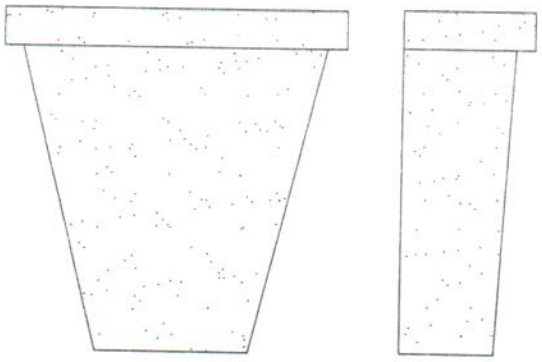

KS1

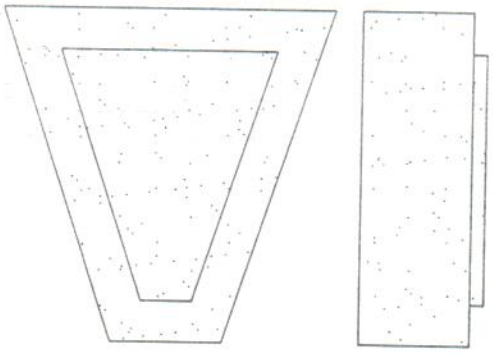

KS2

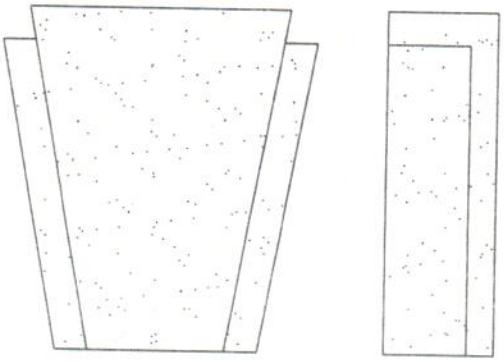

KS3

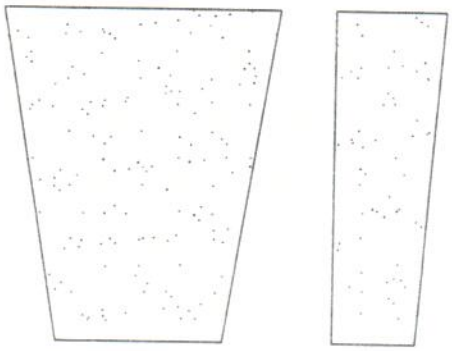

KS4

Sun-Rock, Inc.
Phone: 727-938-0013 Fax: 727-934-5979



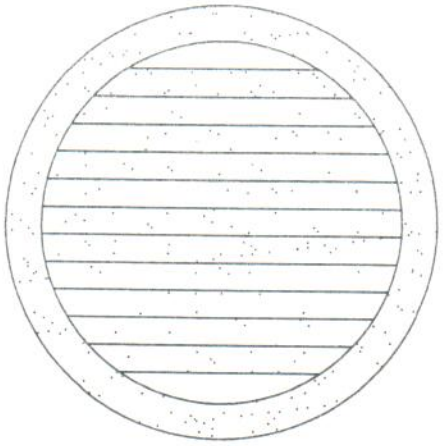

MD1

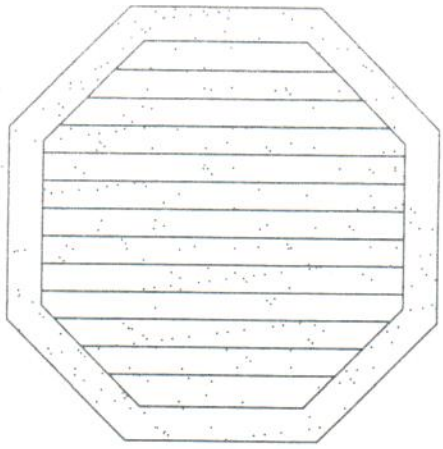

MD2

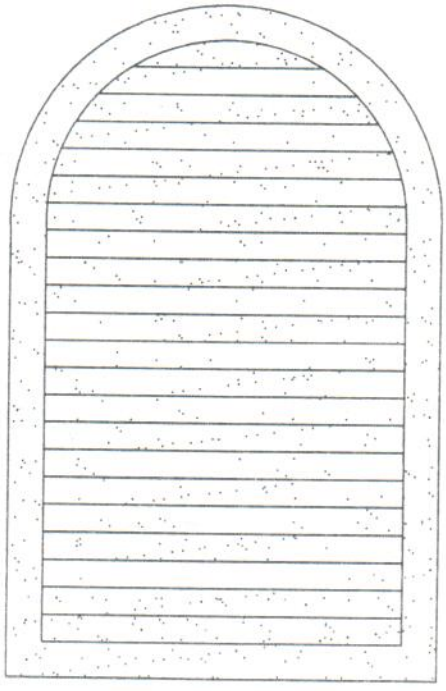

MD3

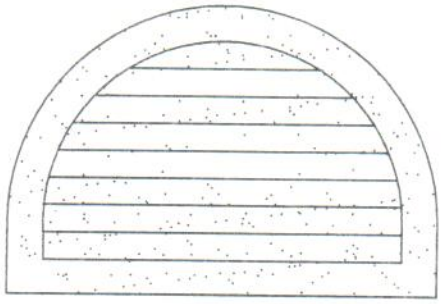

MD4

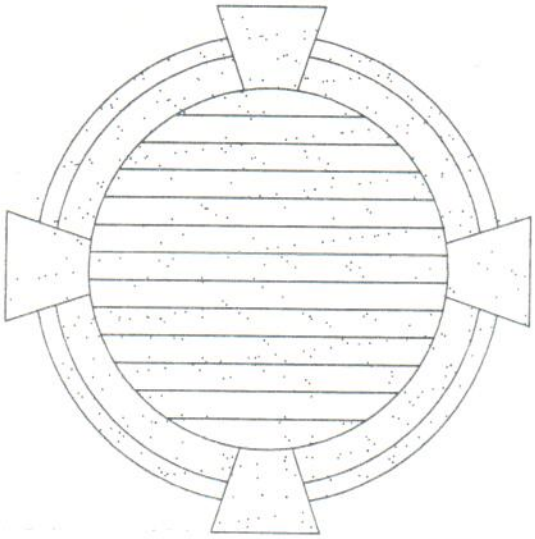

MD5

Sun-Rock, Inc.
Phone: 727-938-0013 Fax: 727-934-5979



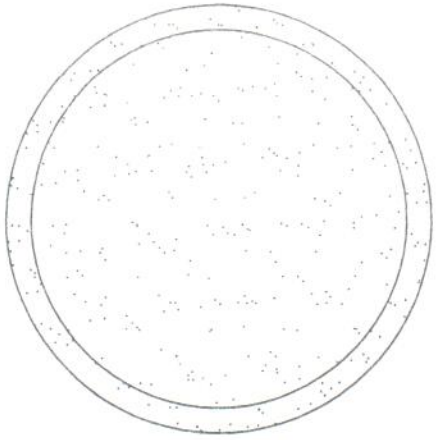

MD6

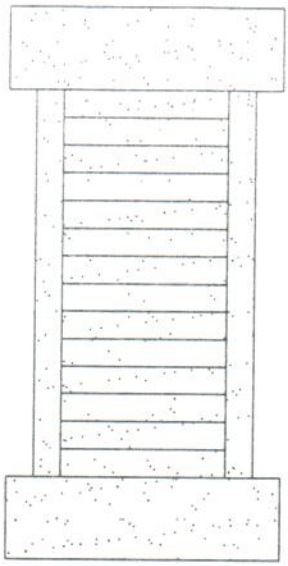

MD7

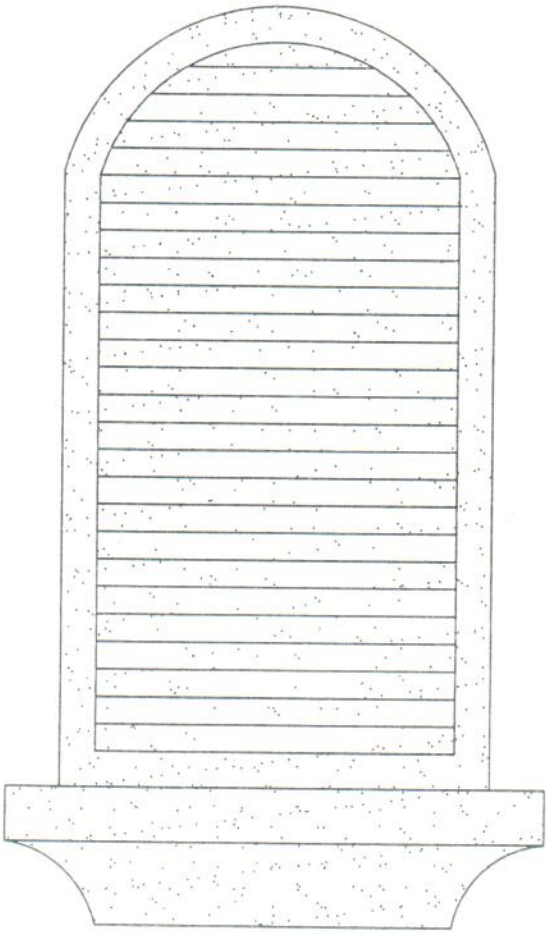

MD9

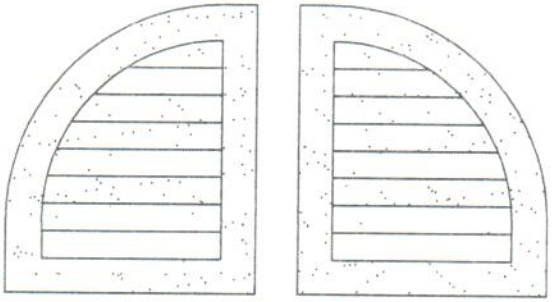

MD8

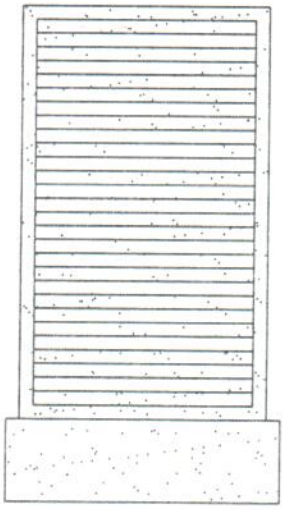

MD10

Sun-Rock, Inc.
Phone: 727-938-0013 Fax: 727-934-5979



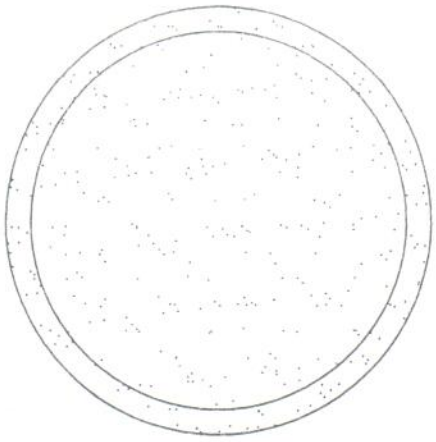

MD6

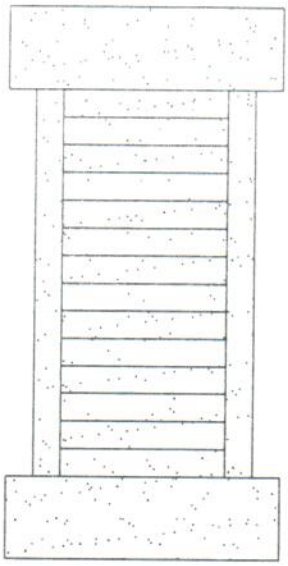

MD7

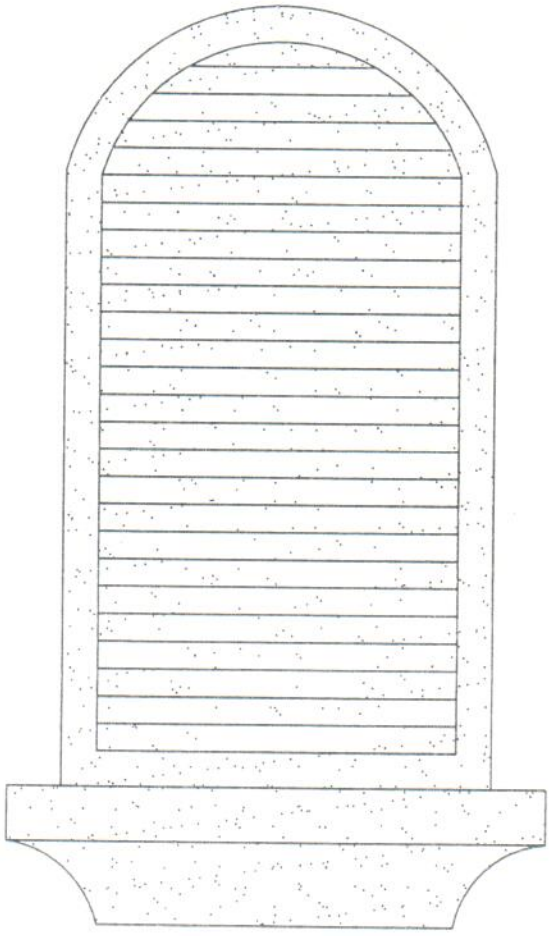

MD9

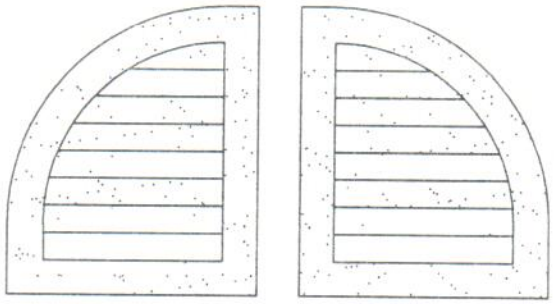

MD8

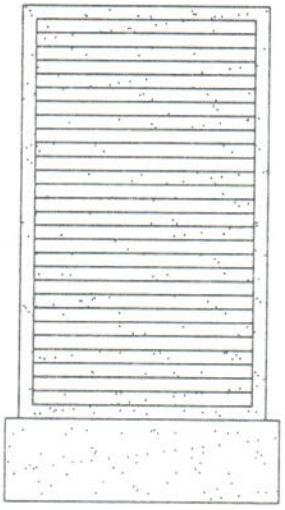

MD10

Sun-Rock, Inc.
Phone: 727-938-0013 Fax: 727-934-5979



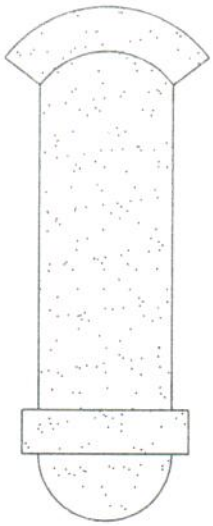

MD11

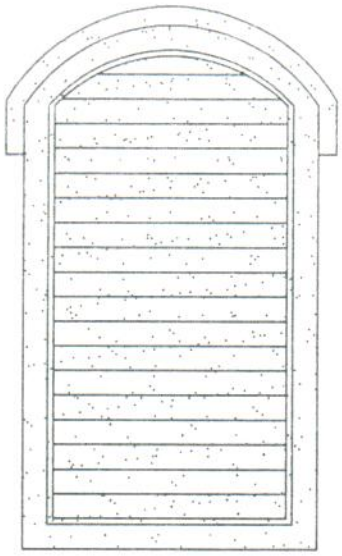

MD12

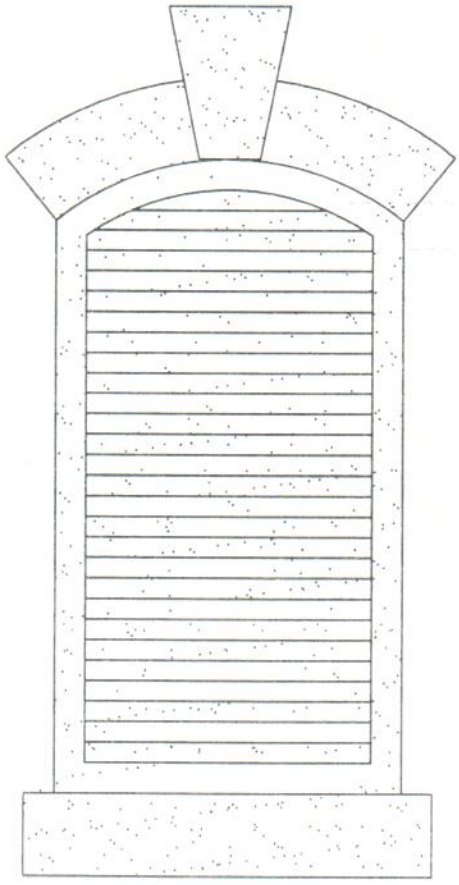

MD13

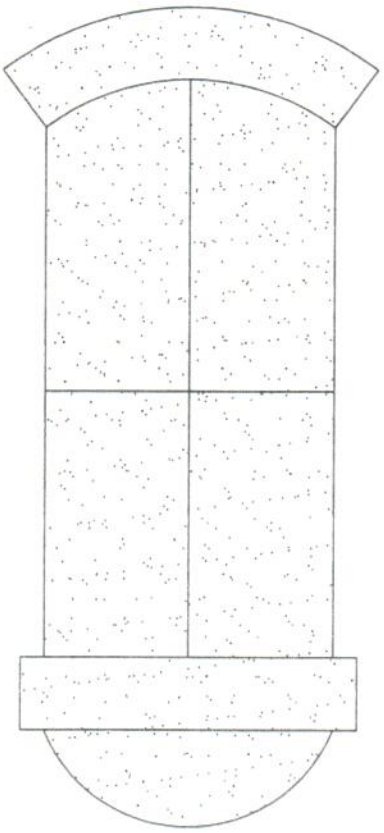

MD14

Sun–Rock, Inc.
Phone: 727-938-0013 Fax: 727-934-5979



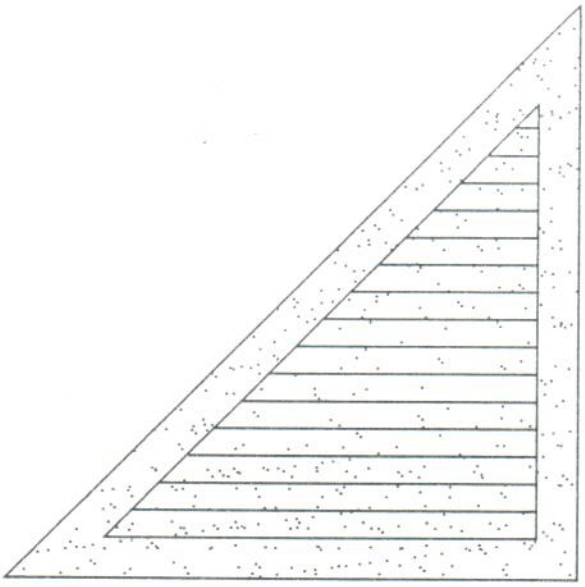

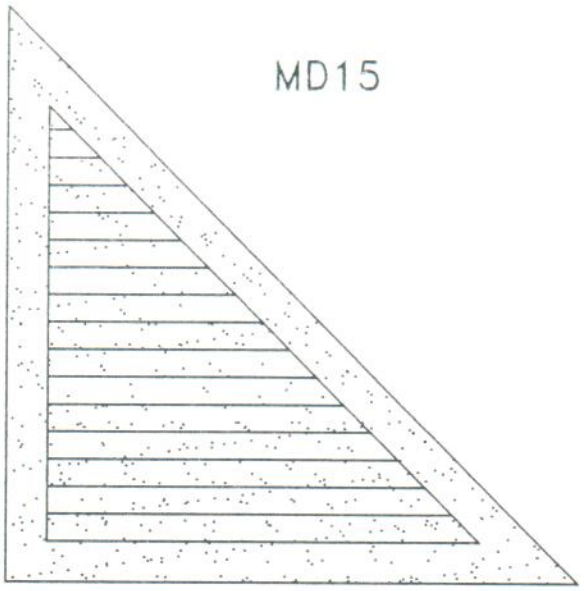

MD15

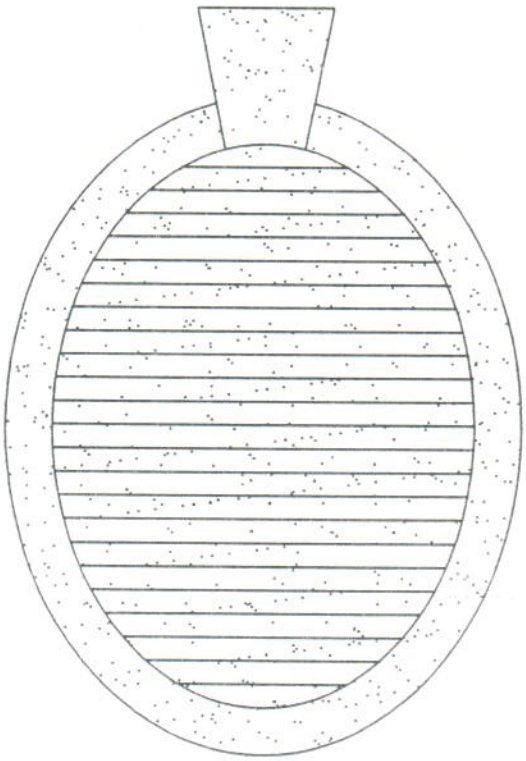

MD16

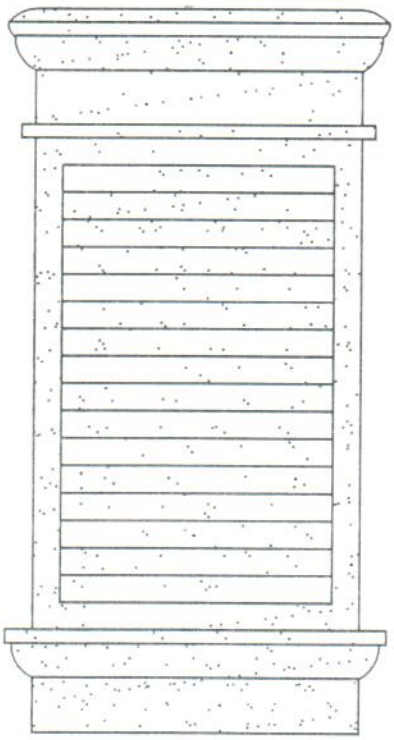

MD17

Sun–Rock, Inc.
Phone: 727-938-0013 Fax: 727-934-5979



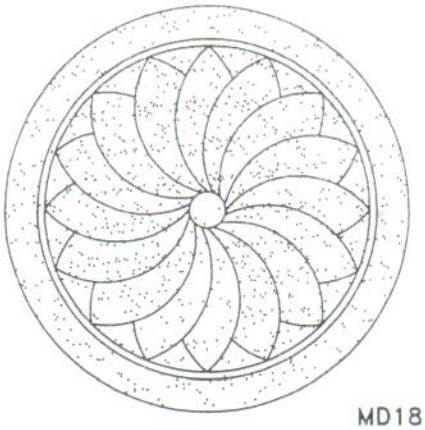

MD18

MD20

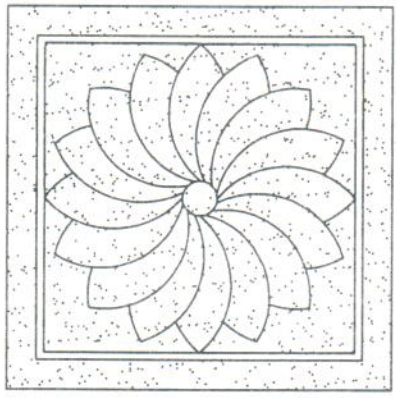

MD19

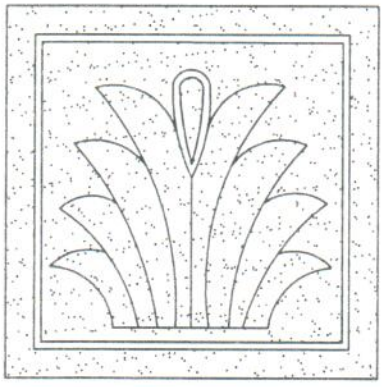

MD21

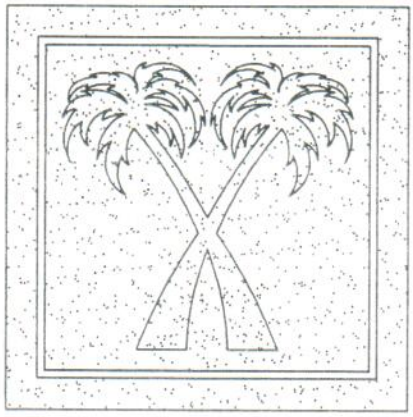

MD22

MD23

Sun–Rock, Inc.
Phone: 727-938-0013 Fax: 727-934-5979



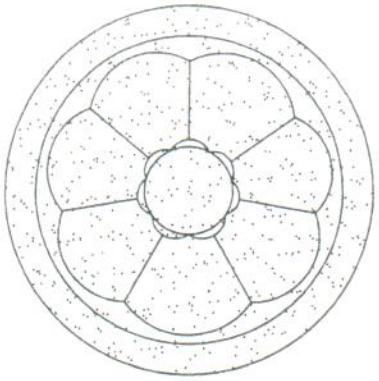

MD24

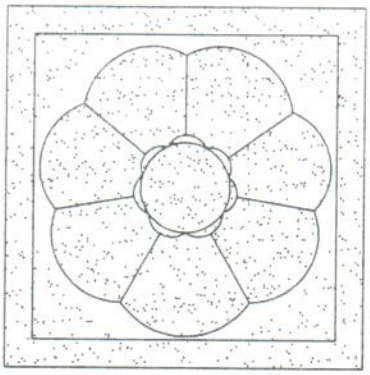

MD25

MD26

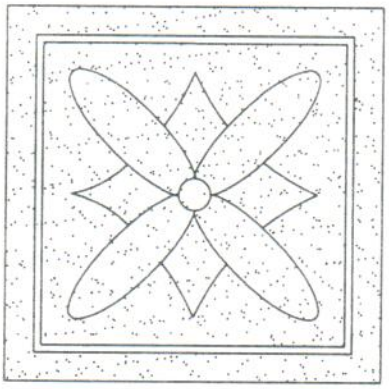

MD27

MD28

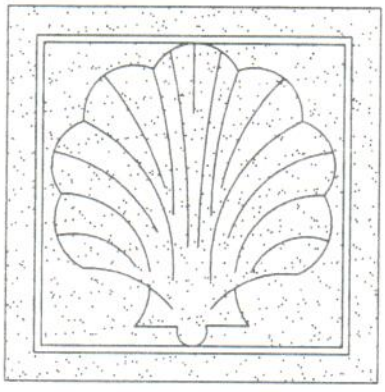

MD29

Sun–Rock, Inc.
Phone: 727-938-0013 Fax: 727-934-5979

MD30R

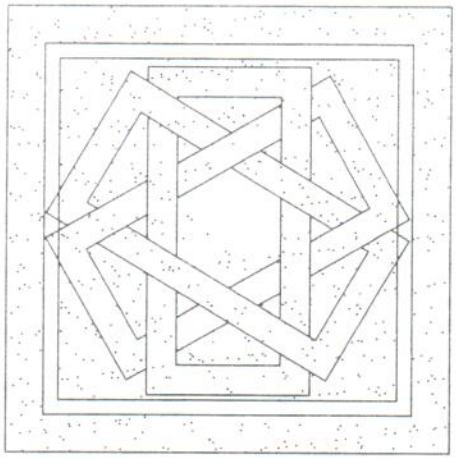

MD30S

MD32R

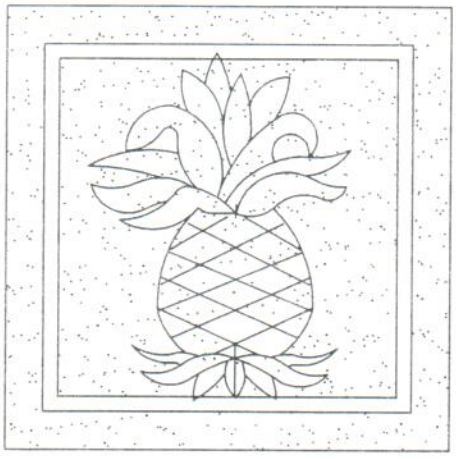

MD32S

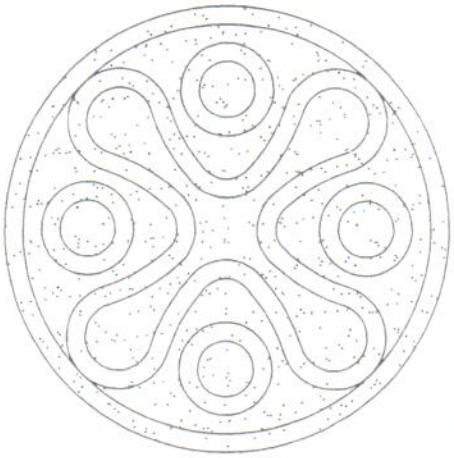

MD48R

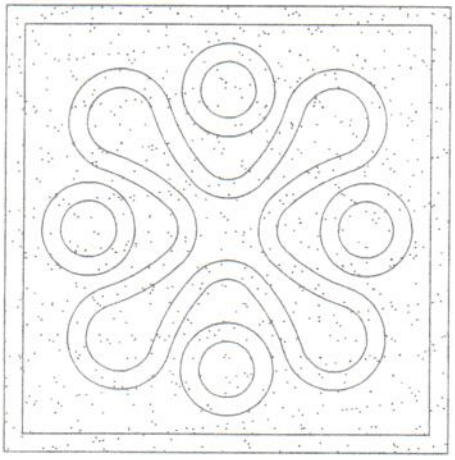

MD48S

Sun–Rock, Inc.
Phone: 727-938-0013 Fax: 727-934-5979

MD52R

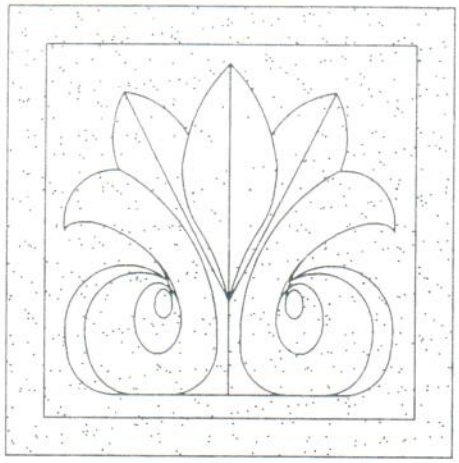

MD52S

MD49R

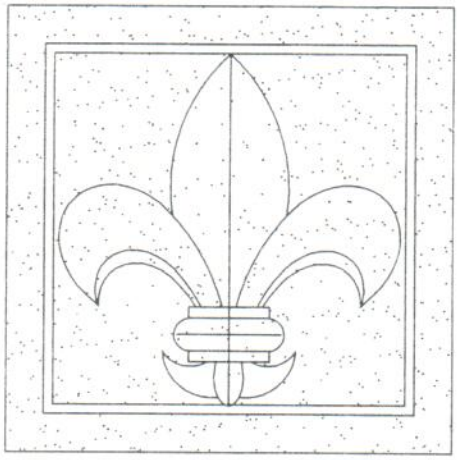

MD49S

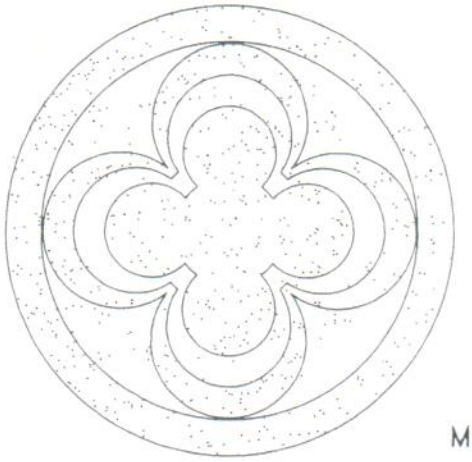

MD45R

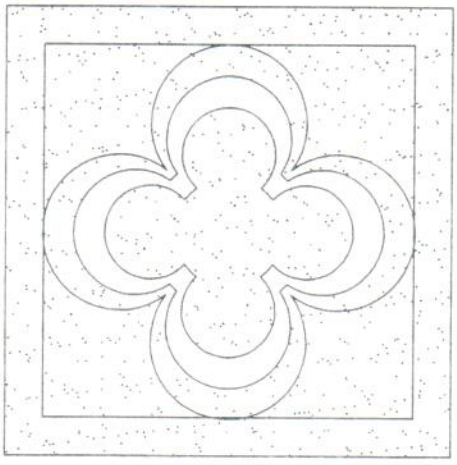

MD45S

Sun–Rock, Inc.
Phone: 727-938-0013 Fax: 727-934-5979

MD53R

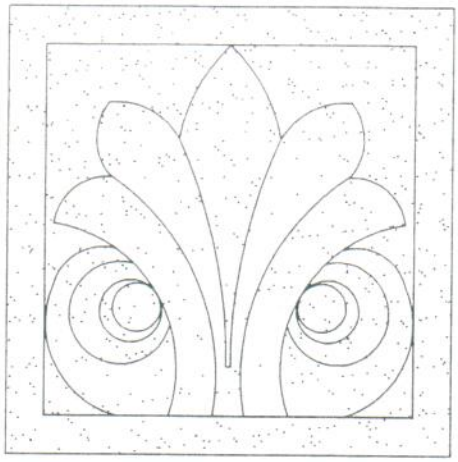

MD53S

MD54R

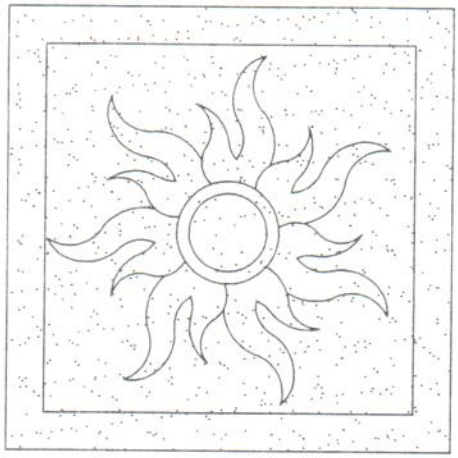

MD54S

MD43R

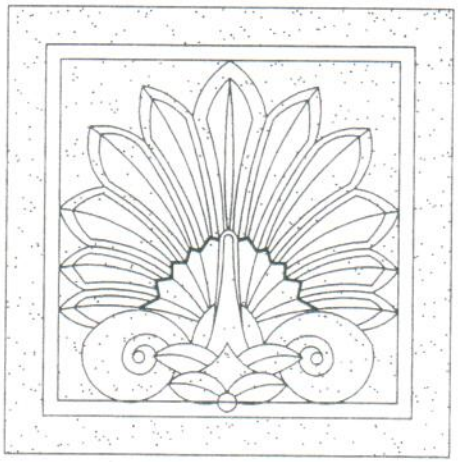

MD43S

Sun–Rock, Inc.
Phone: 727-938-0013 Fax: 727-934-5979



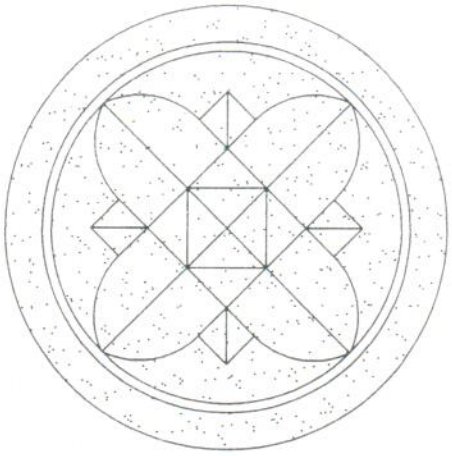

MD50R

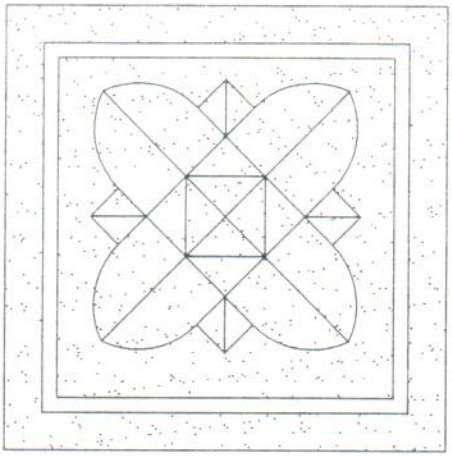

MD50S

MD38R

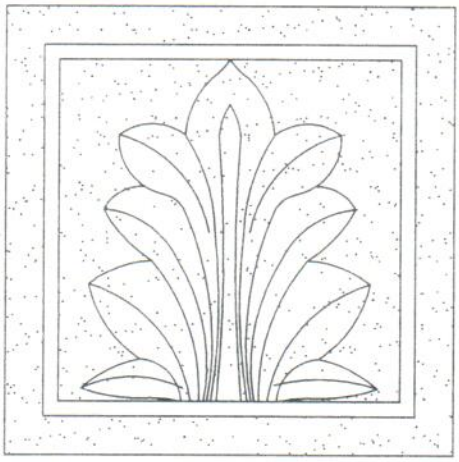

MD38S

MD51R

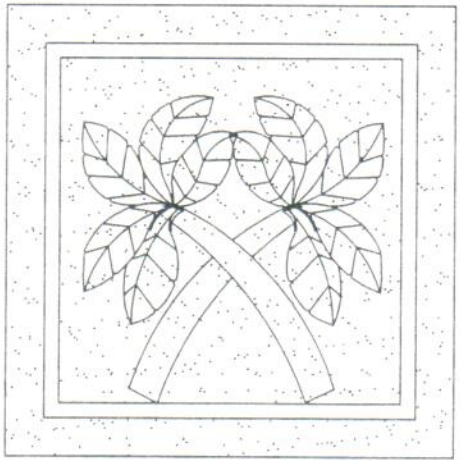

MD51S

# Villa Dilencia

# Villa Solivita

# Mar-a-lago

# Clarendon III